Cubitts

01 Cubitts

02 Site

03 Concept

04 Scheme

Modern Styles

Bespoke

Forever Frame

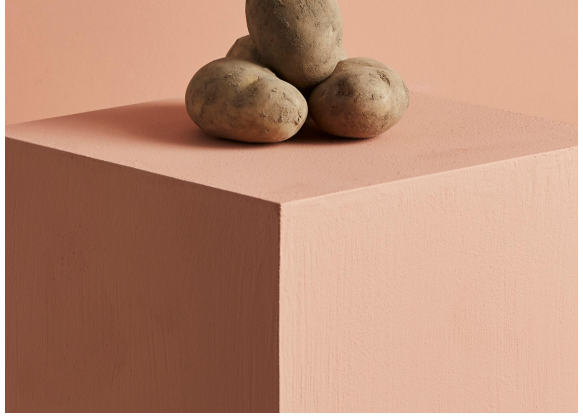

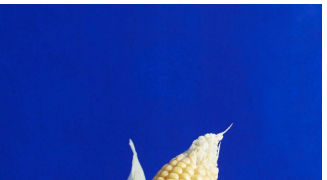
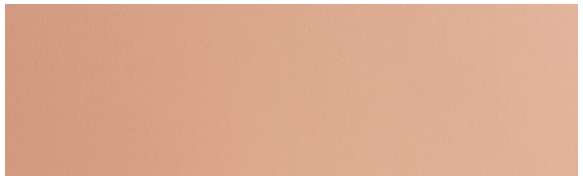
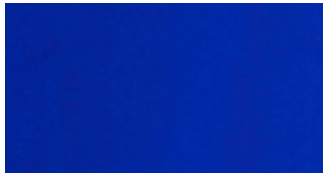

Zone
ENDS
POWER
RECORD
POWER
FRAGILE

Covent Garden

Soho

Leeds

01 Cubitts

02 Site

03 Concept

04 Scheme

Gasholder

St. Pancras Lock

Canalside Green Steps

Ual Central St. Martins

Granary Square

Coal Drops Yard

CANAL REACH
TAPPER WALK
WOLLST. ST
HANDYSIDE STREET
ST PANCRAS
GARDENS
STABLE STREET
CAMLEY STREET
GRANARY
SQUARE
REGENT'S CANAL

CANAL REACH
TAPPER WALK
WOLLST. ST
HANDYSIDE STREET
ST PANCRAS
GARDENS
STABLE STREET
CAMLEY STREET
GRANARY
SQUARE
REGENT'S CANAL

CANAL REACH
TAPPER WALK
WOLLST. ST
HANDYSIDE STREET
ST PANCRAS
GARDENS
STABLE STREET
CAMLEY STREET
GRANARY
SQUARE
REGENT'S CANAL

CANAL REACH
TAPPER WALK
WOLLST. ST
HANDYSIDE STREET
ST PANCRAS
GARDENS
STABLE STREET
CAMLEY STREET
GRANARY
SQUARE
REGENT'S CANAL

CANAL REACH
TAPPER WALK
WOLLST. ST
HANDYSIDE STREET
ST PANCRAS
GARDENS
STABLE STREET
CAMLEY STREET
GRANARY
SQUARE
REGENT'S CANAL

CANAL REACH
TAPPER WALK
WOLLST. ST
HANDYSIDE STREET
ST PANCRAS
GARDENS
STABLE STREET
CAMLEY STREET
GRANARY
SQUARE
REGENT'S CANAL

01 Cubitts

02 Site

03 Concept

04 Scheme

Site

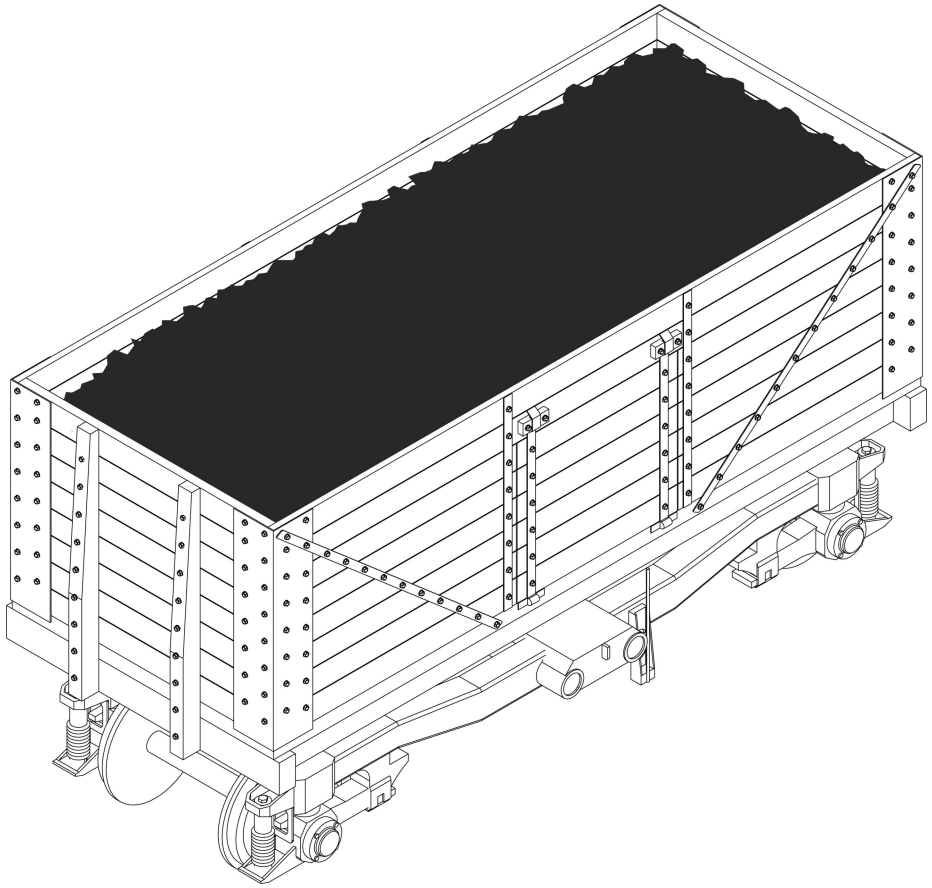

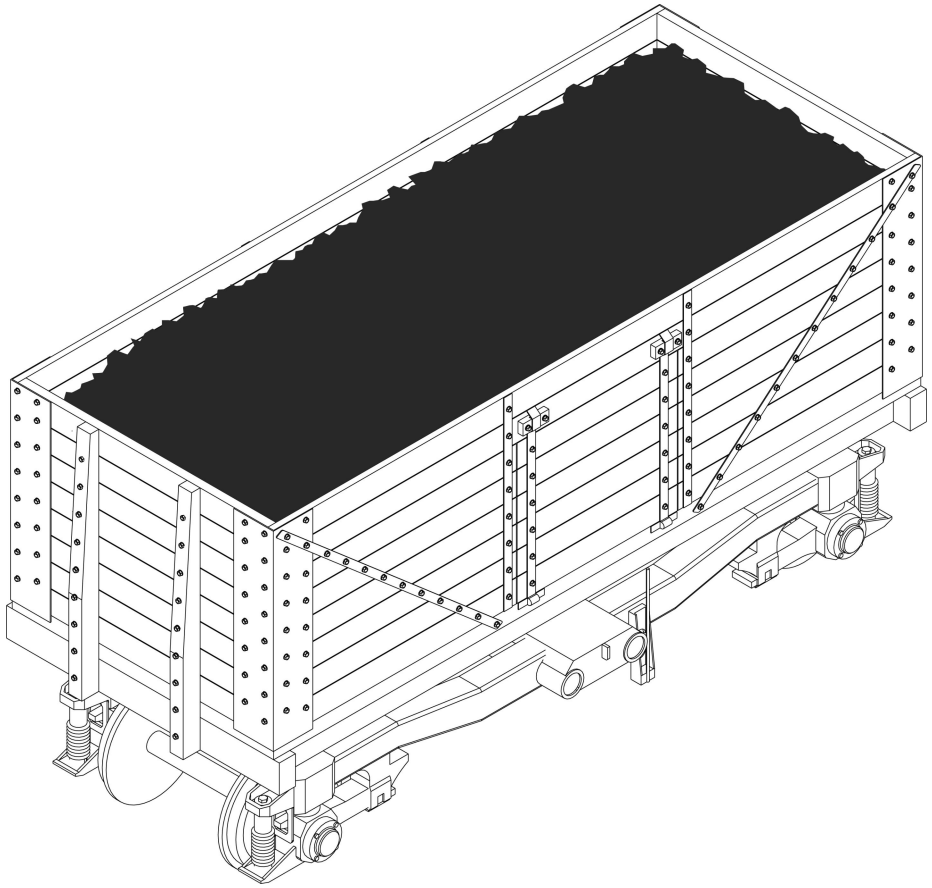

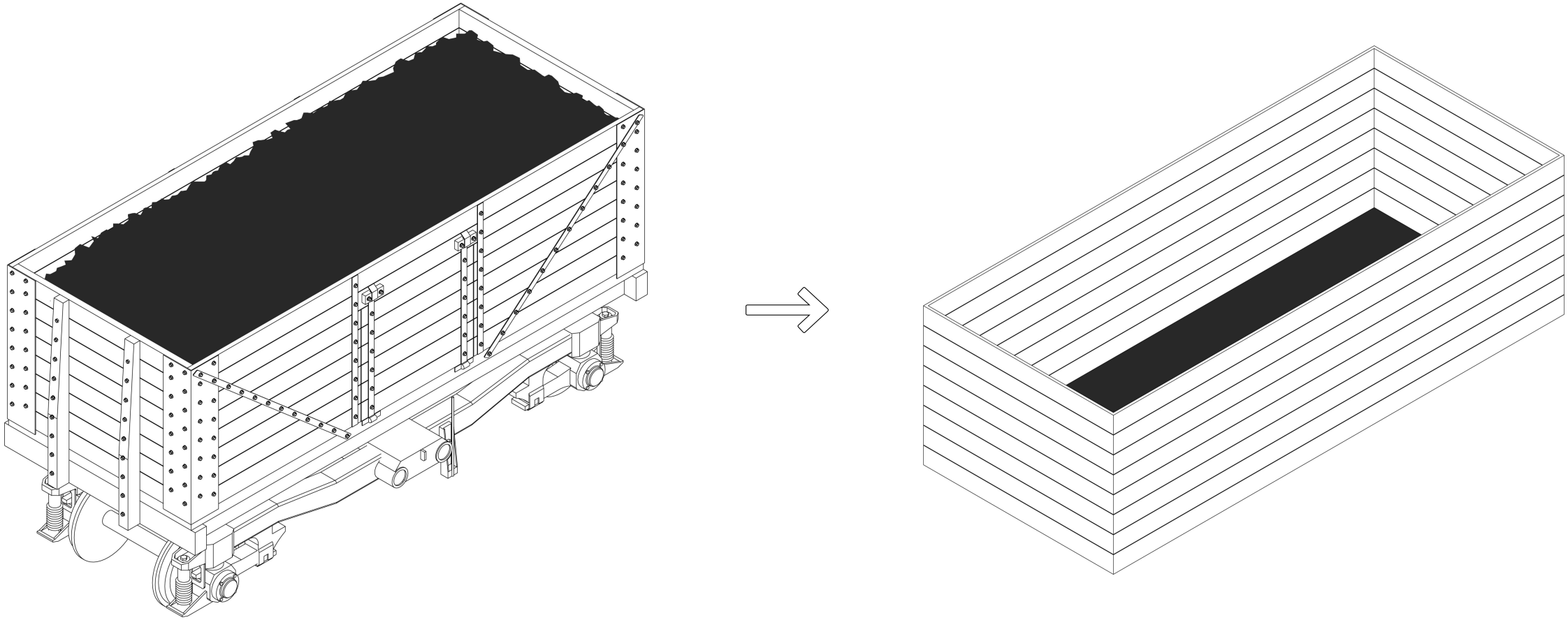

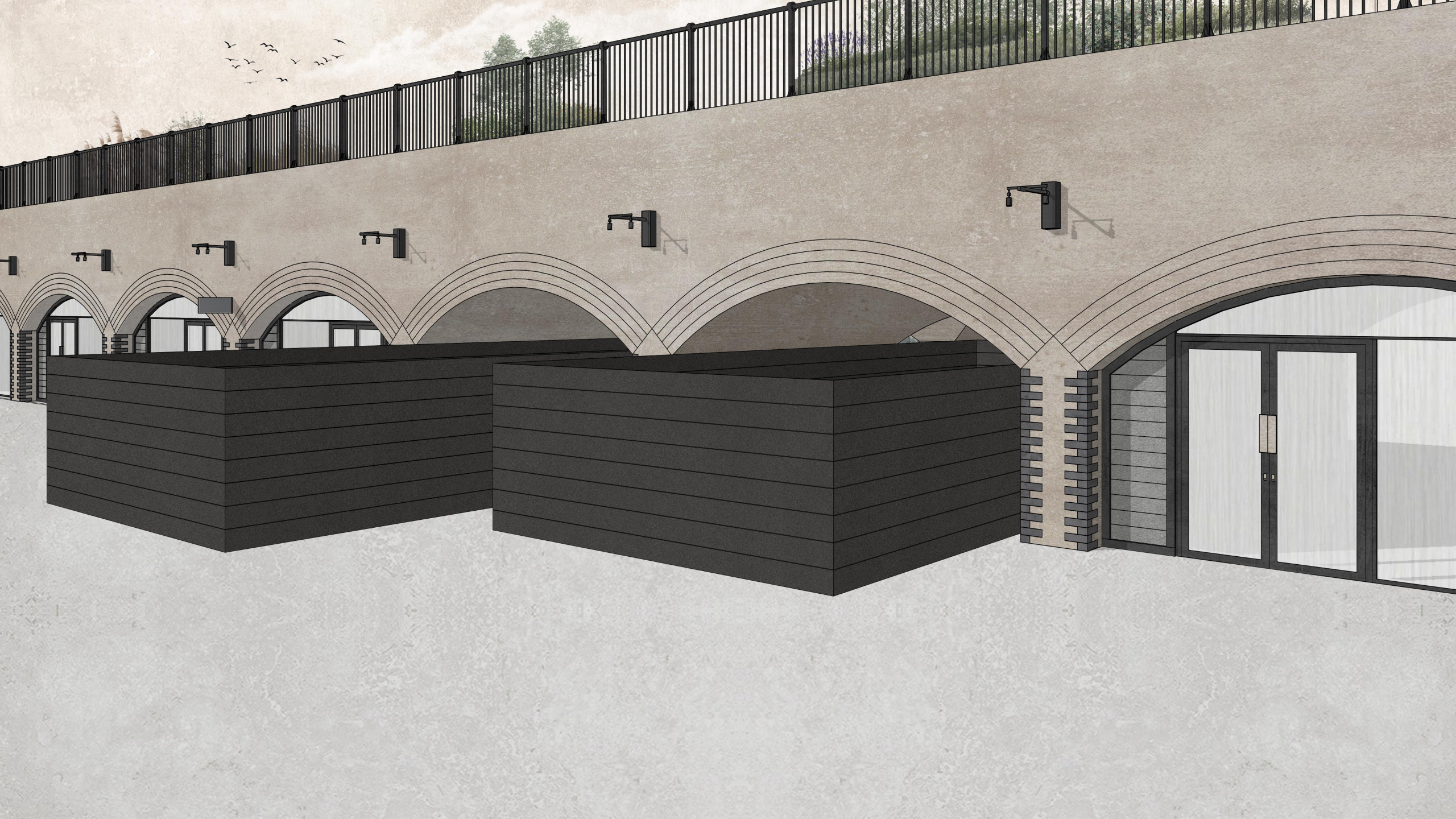

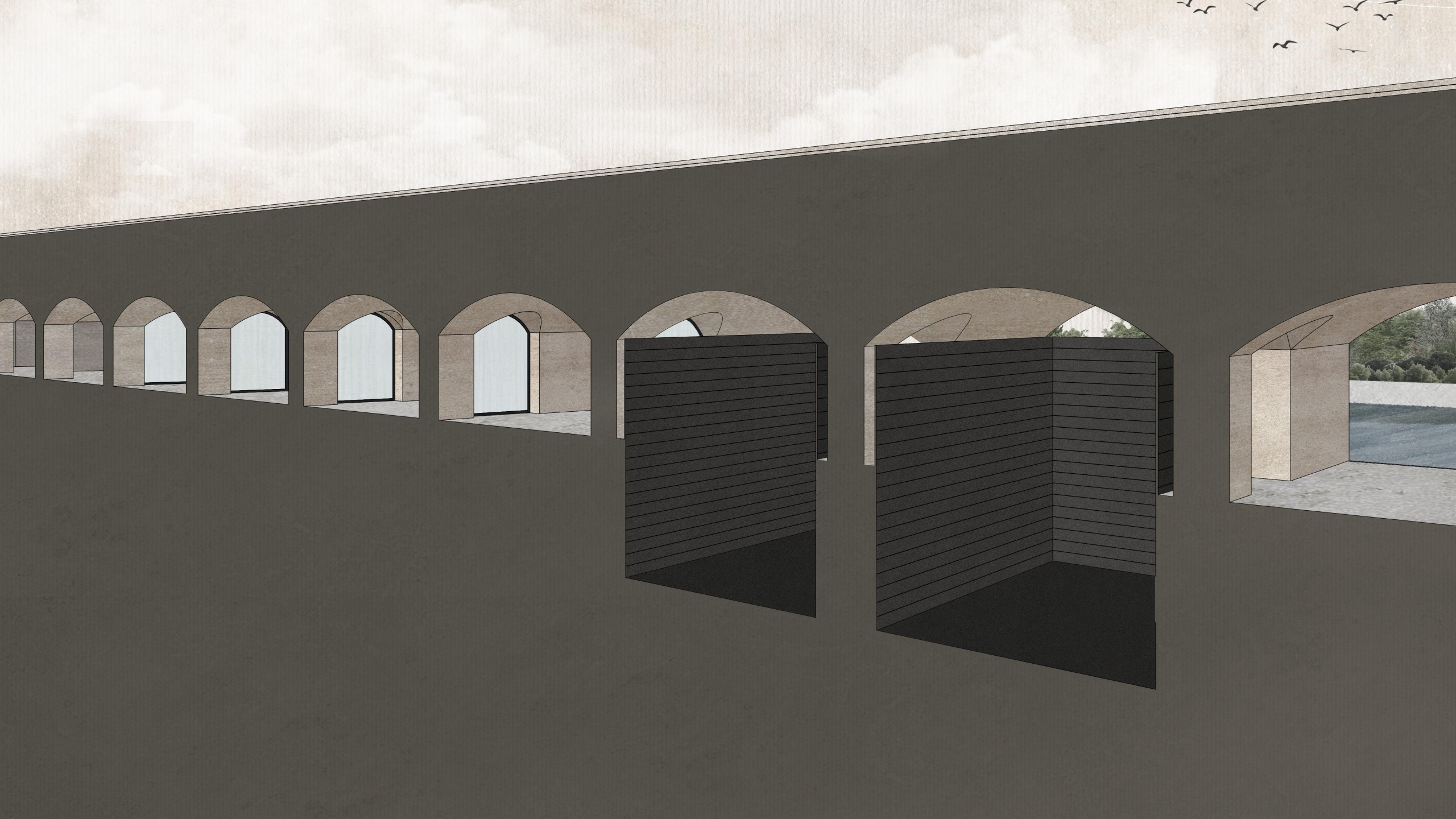

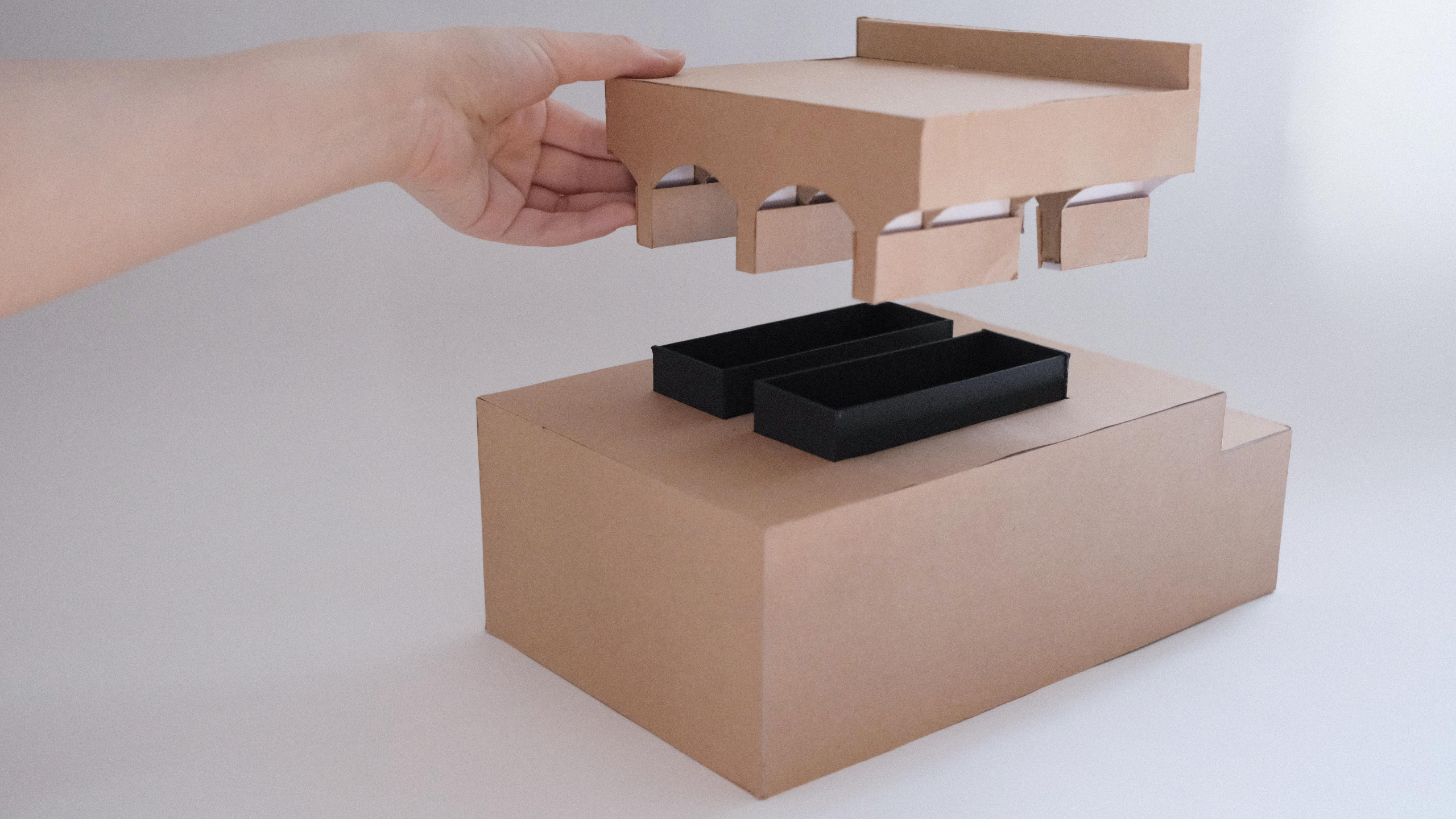

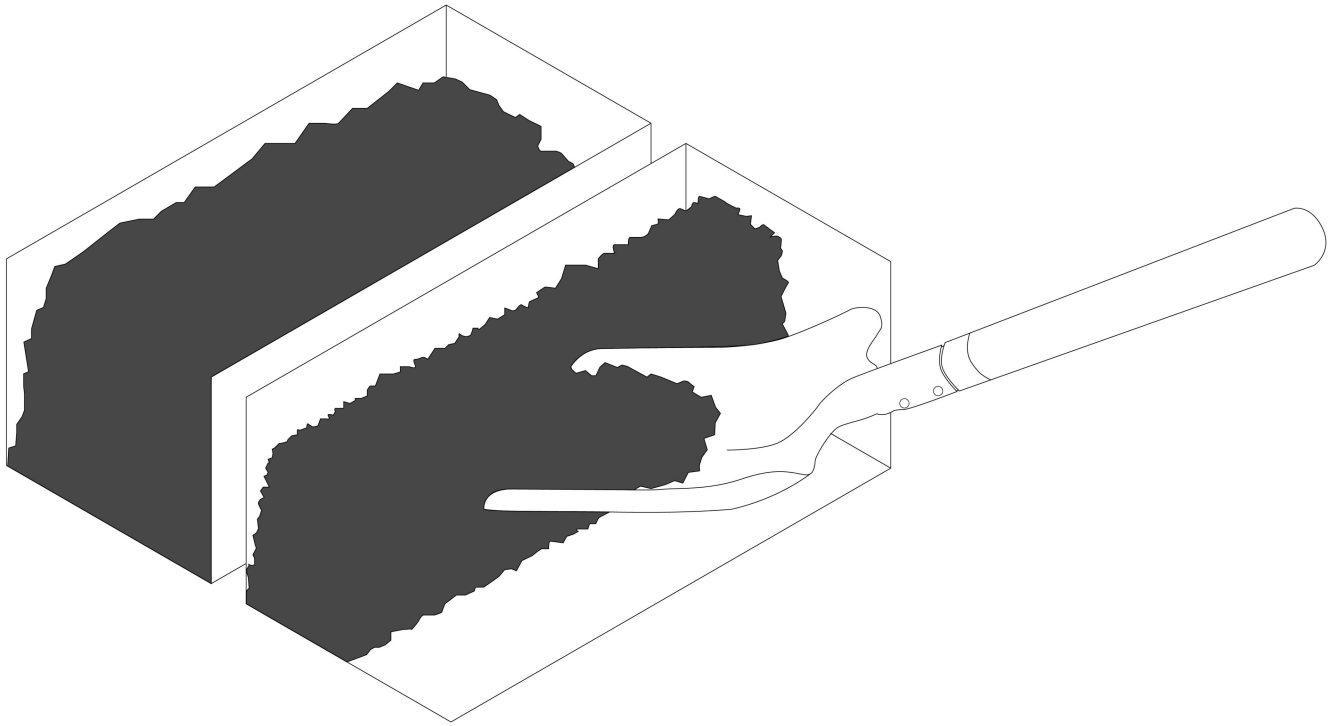

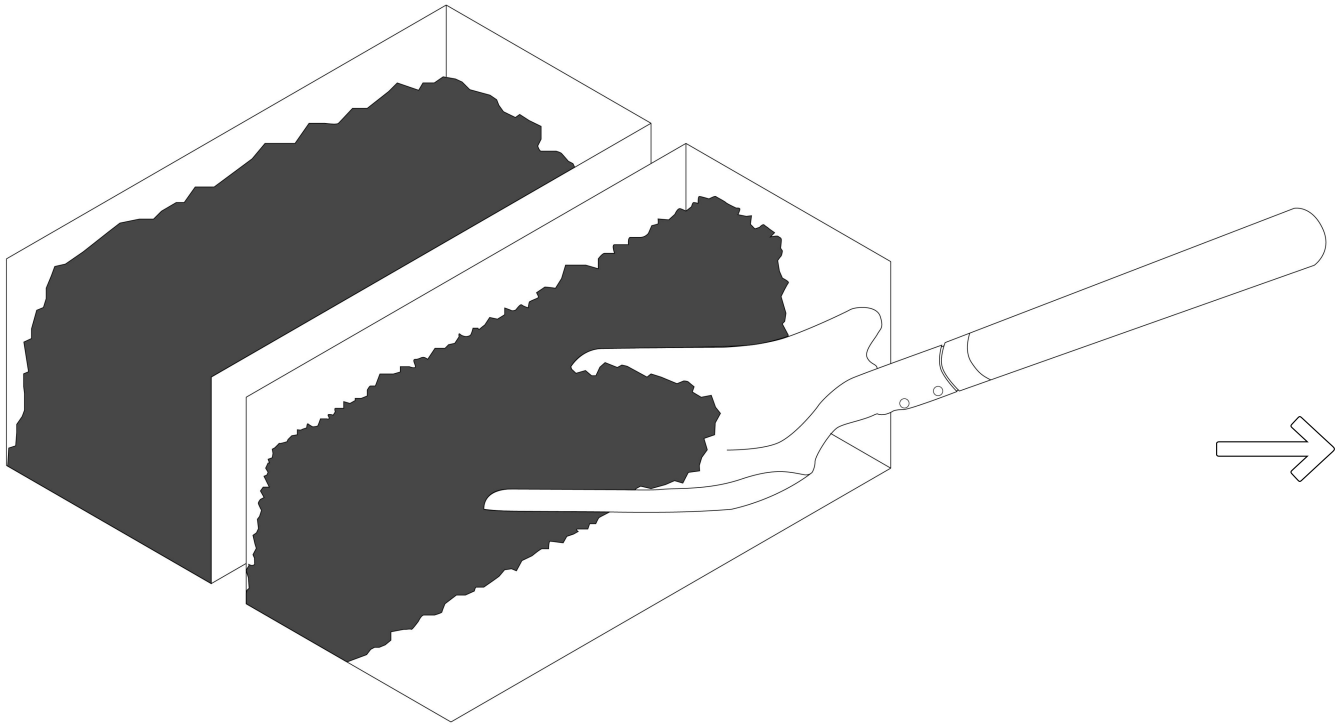

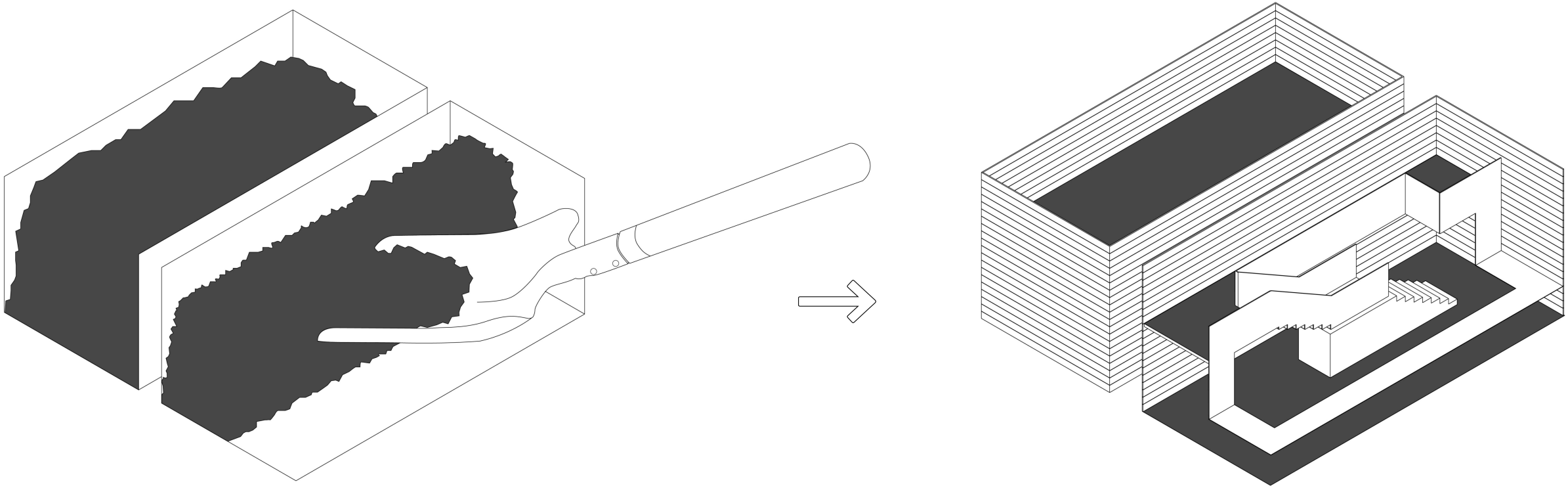

01 Cubitts

02 Site

03 Concept

04 Scheme

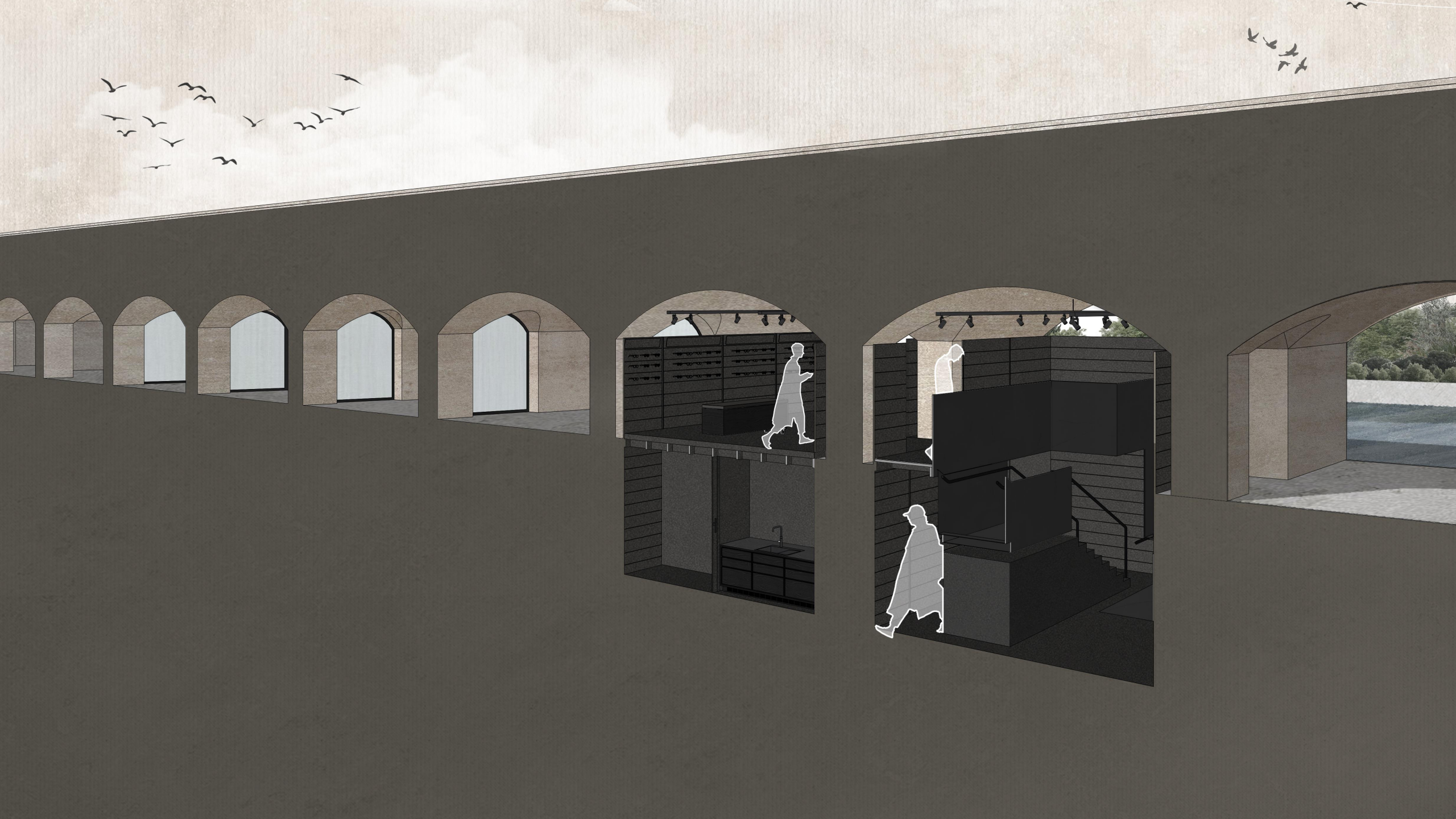

CUBITTS
CUBITTS