PAWFE

- HUMAN FRIENDLY -

PAWFE
- HUMAN FRIENDLY -
PAWFE
- HUMAN FRIENDLY -

PAWFE
PAWFE

How can you make new friends when living in a big city?

LIVE ALONE

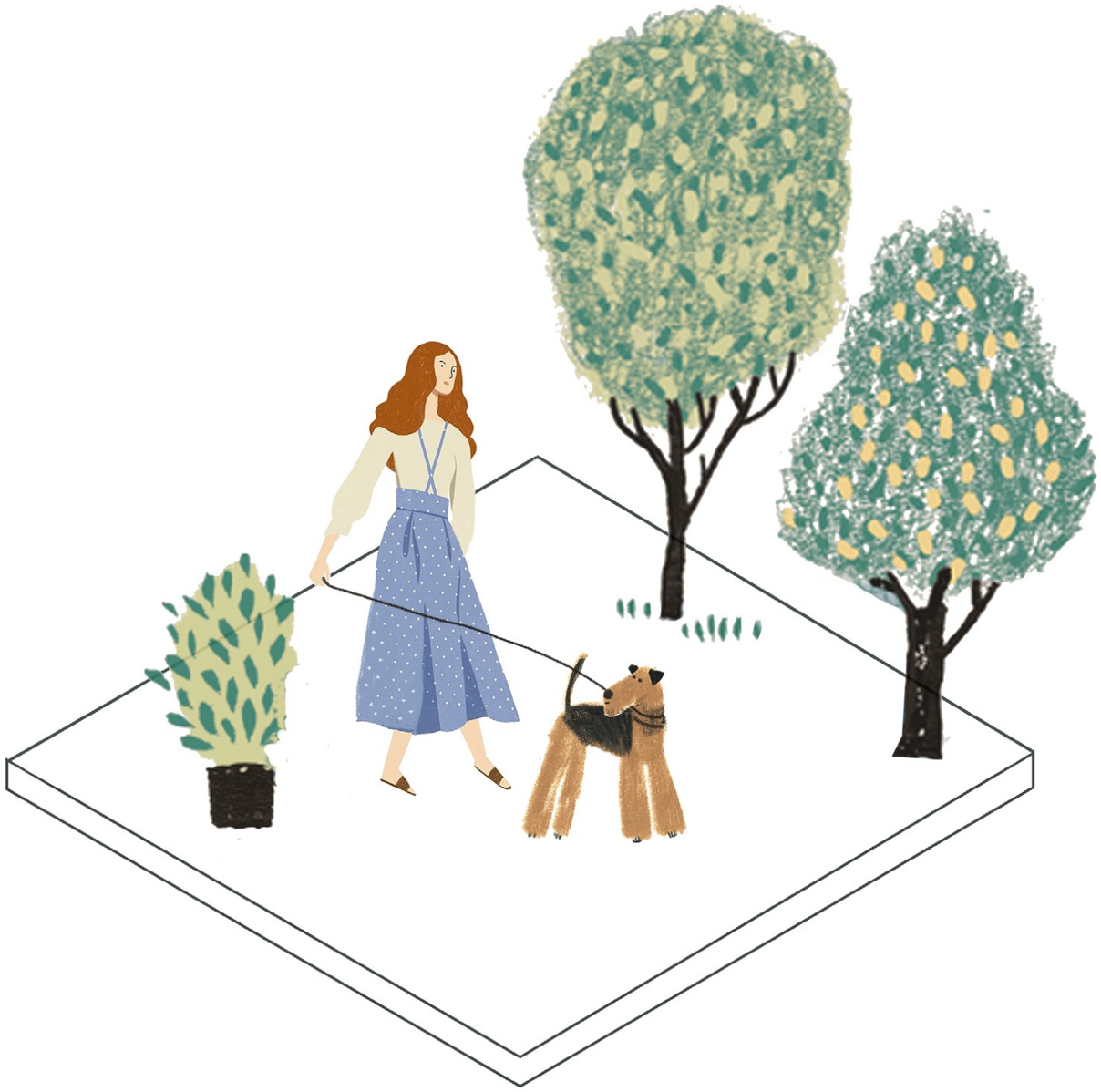

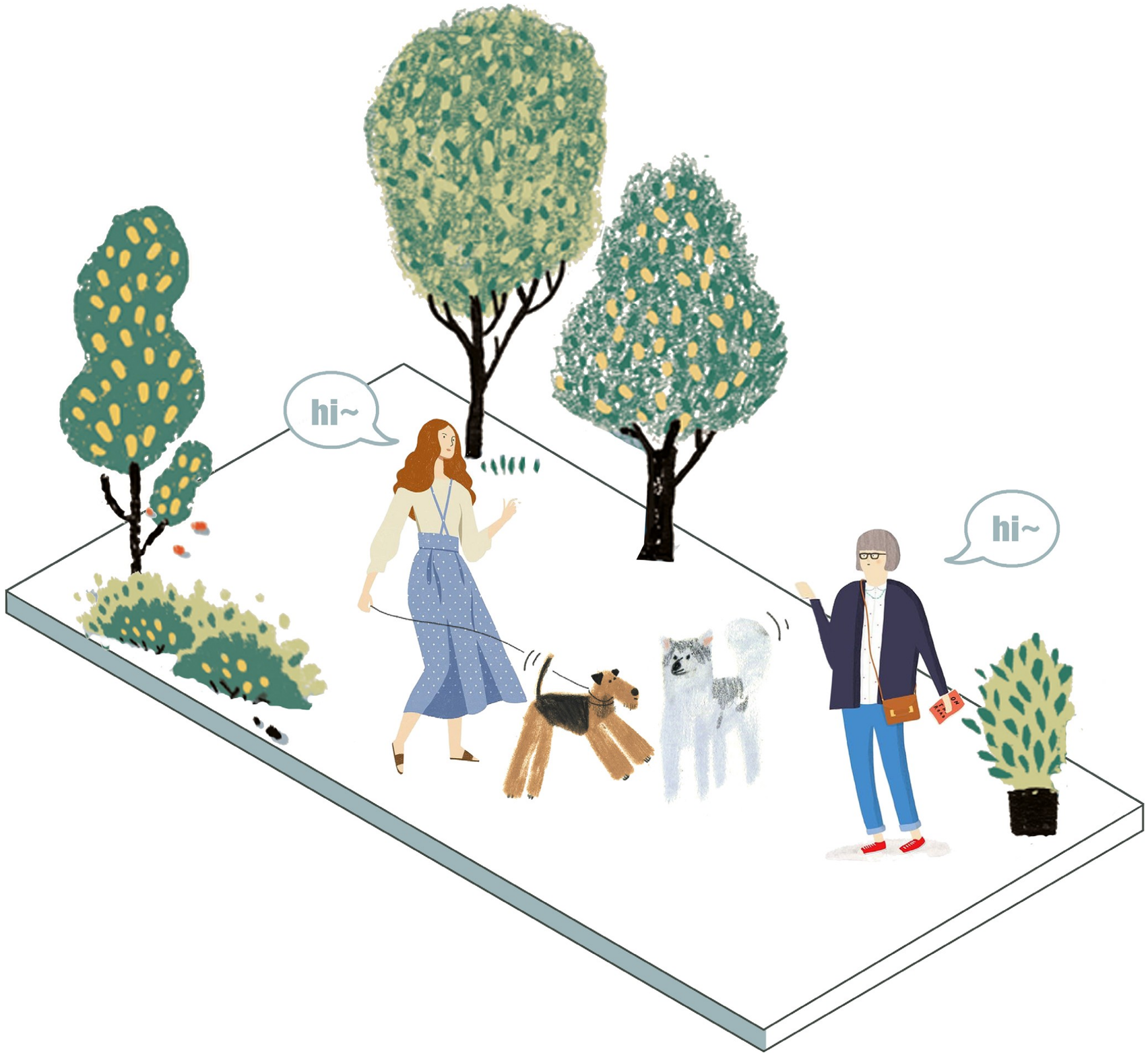
hi~
hi~

hi~
MARVIN
GAYE
hi~
hi~
hi~

DOG-FRIENDLY
CAFE

pawfes

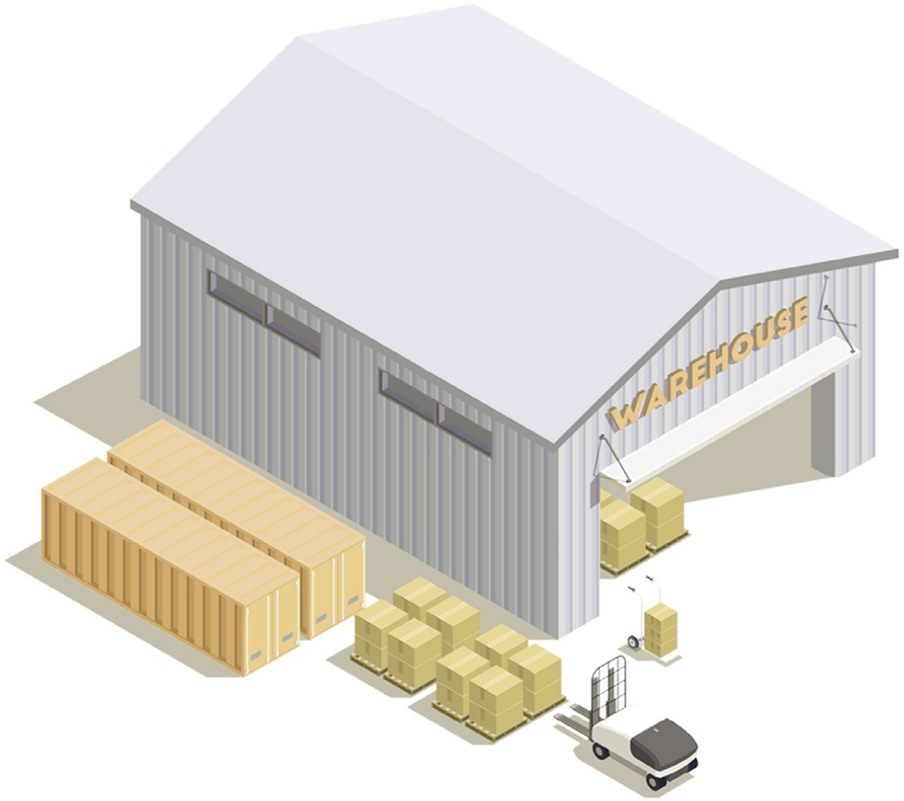
WAREHOUSE

COFFEE SHOP

MARKET

STORE

CAFE

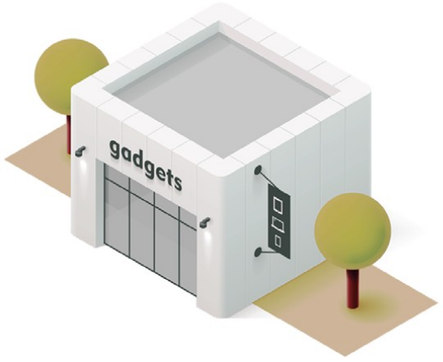
gadgets

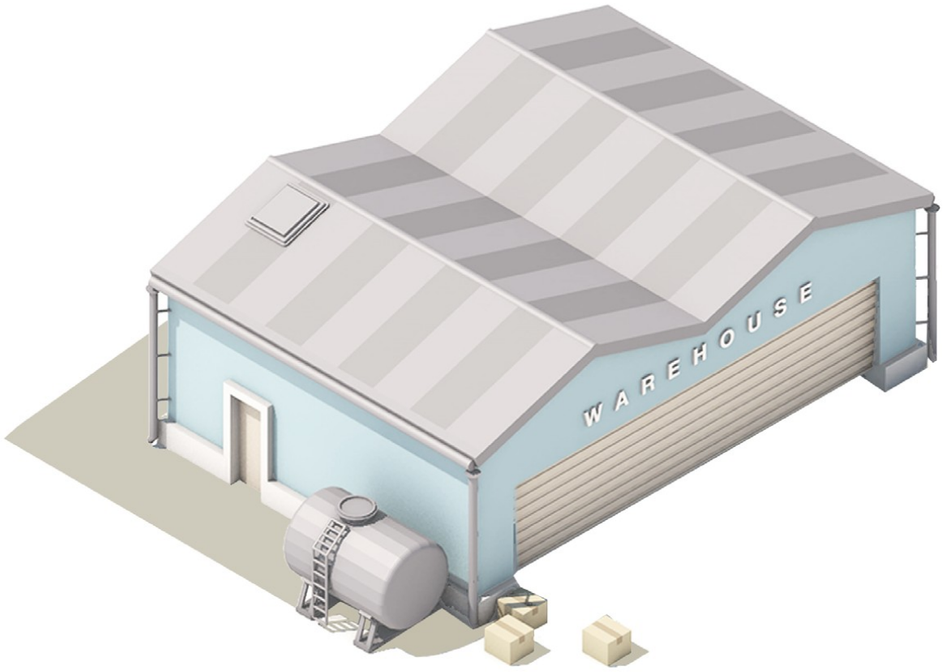
WAREHOUSE

human's view

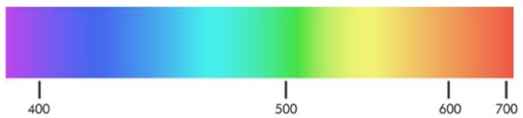

dog's view

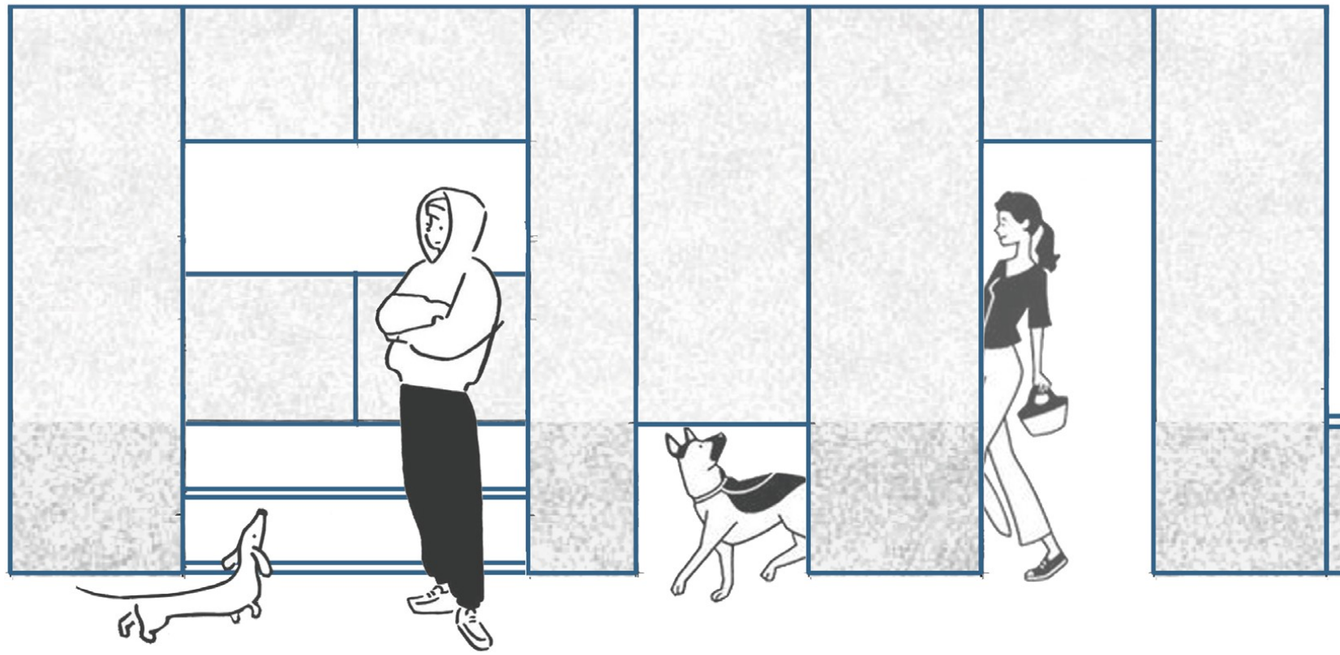

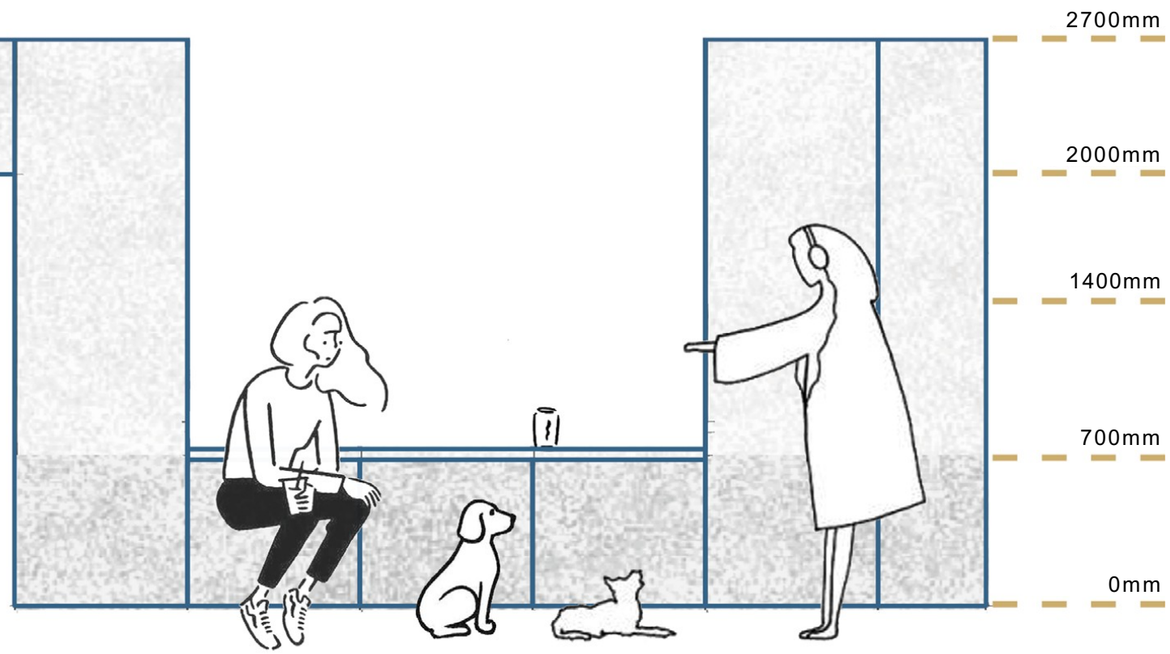

display

tunnel

door

seating

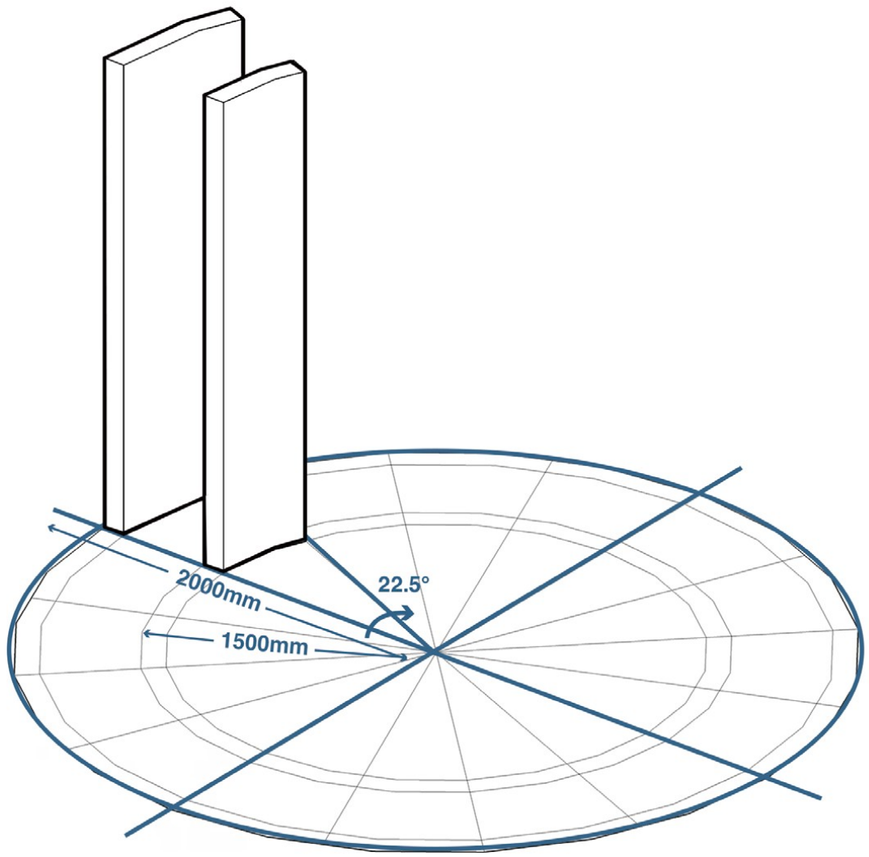
2000mm
1500mm
22.5°

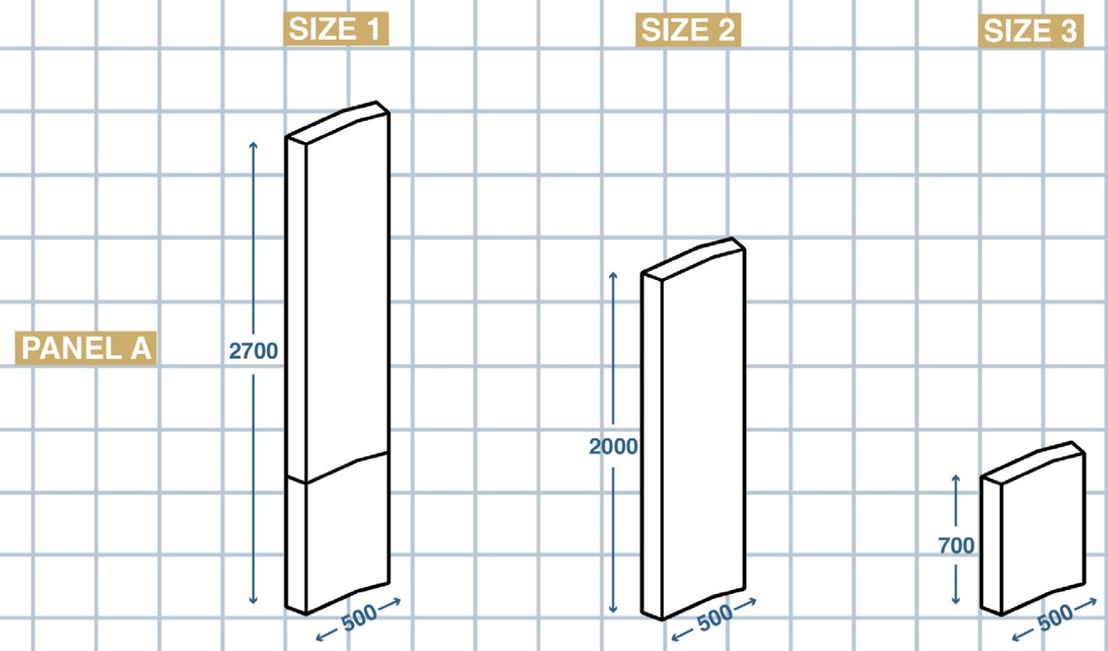
SIZE 1
SIZE 2
SIZE 3
PANEL A
2700
500
2000
500
700
500

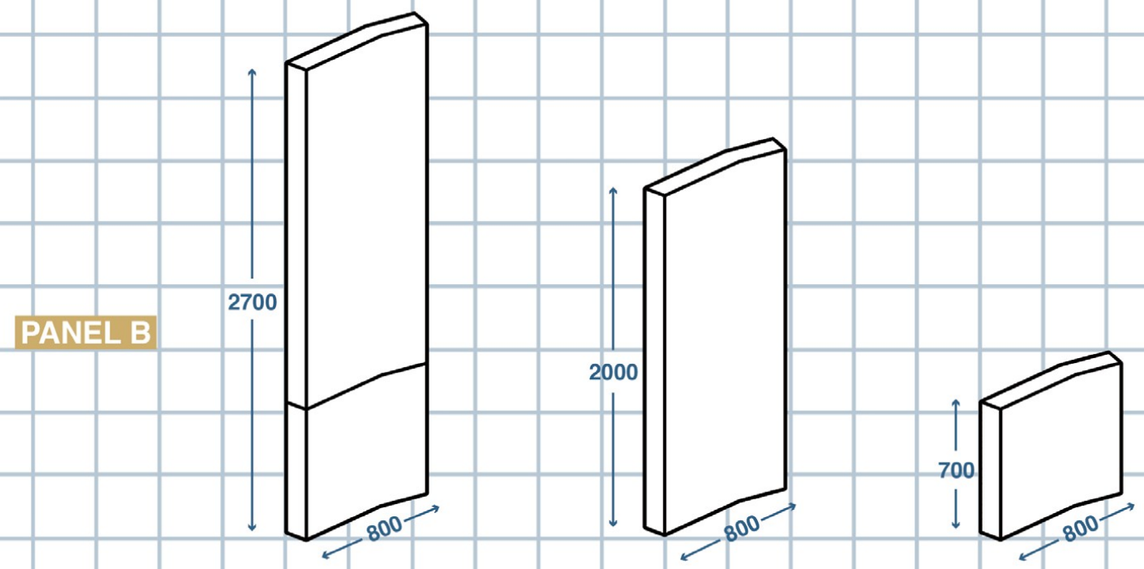
PANEL B
2700
800
2000
800
700
800

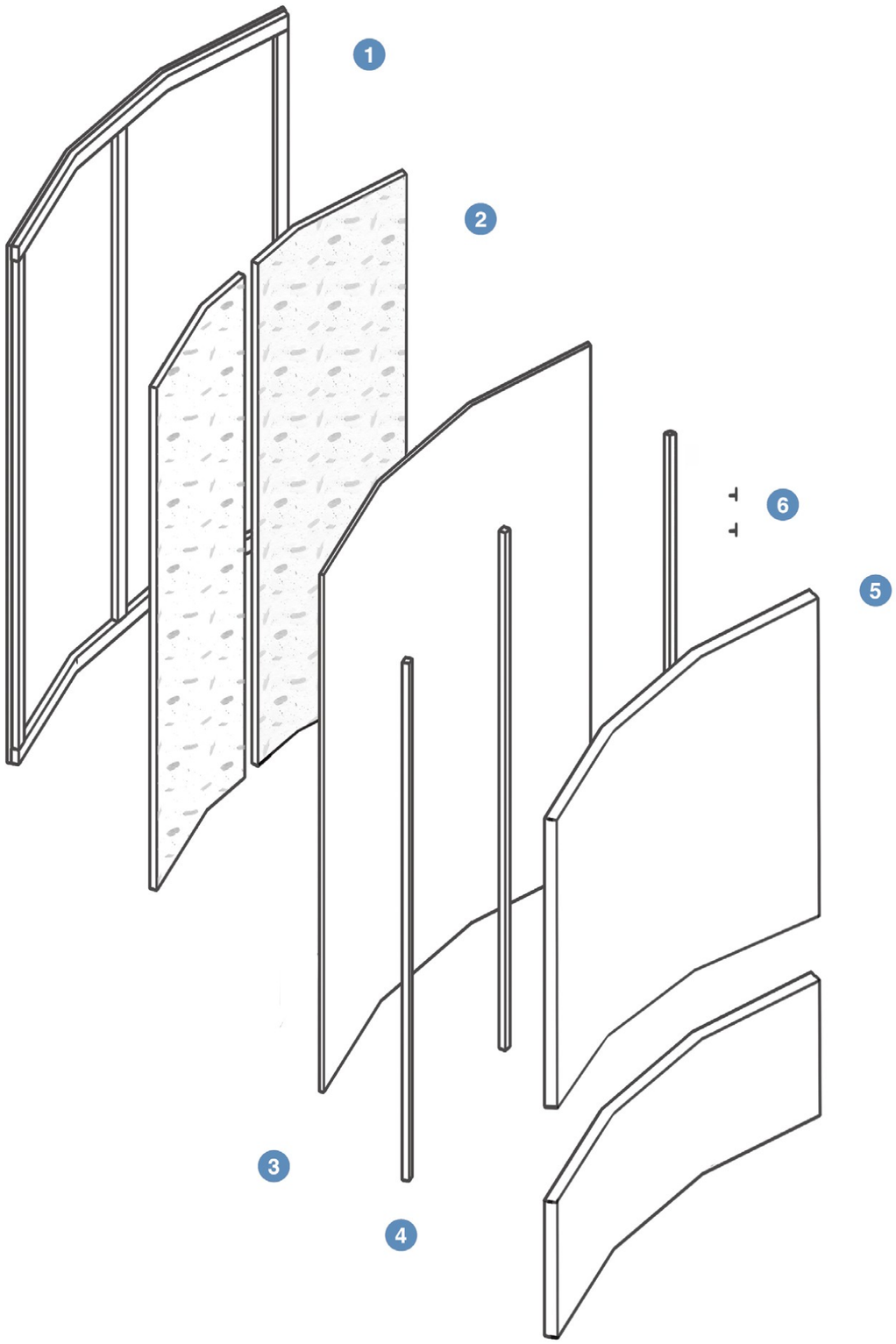
1
2
3
4
5
6

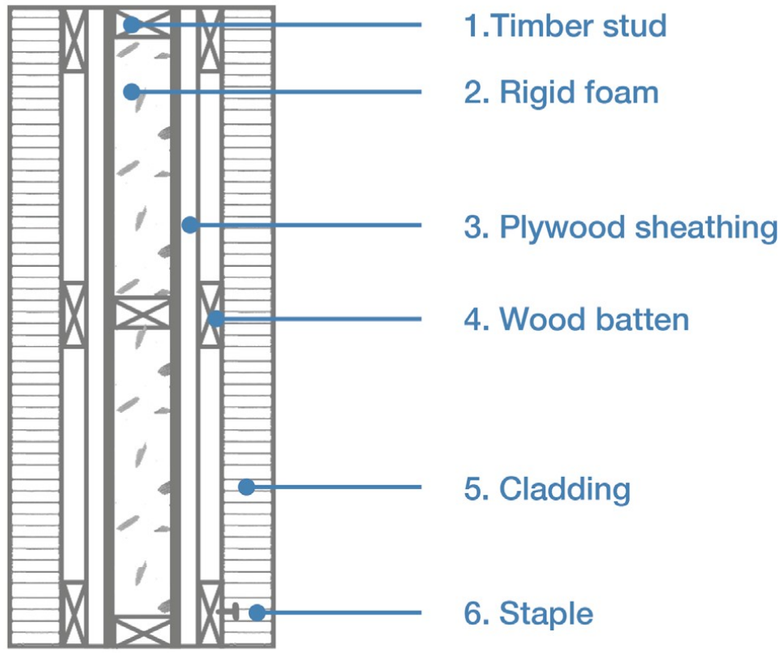
1.Timber stud
2. Rigid foam
3. Plywood sheathing
4. Wood batten
5. Cladding
6. Staple

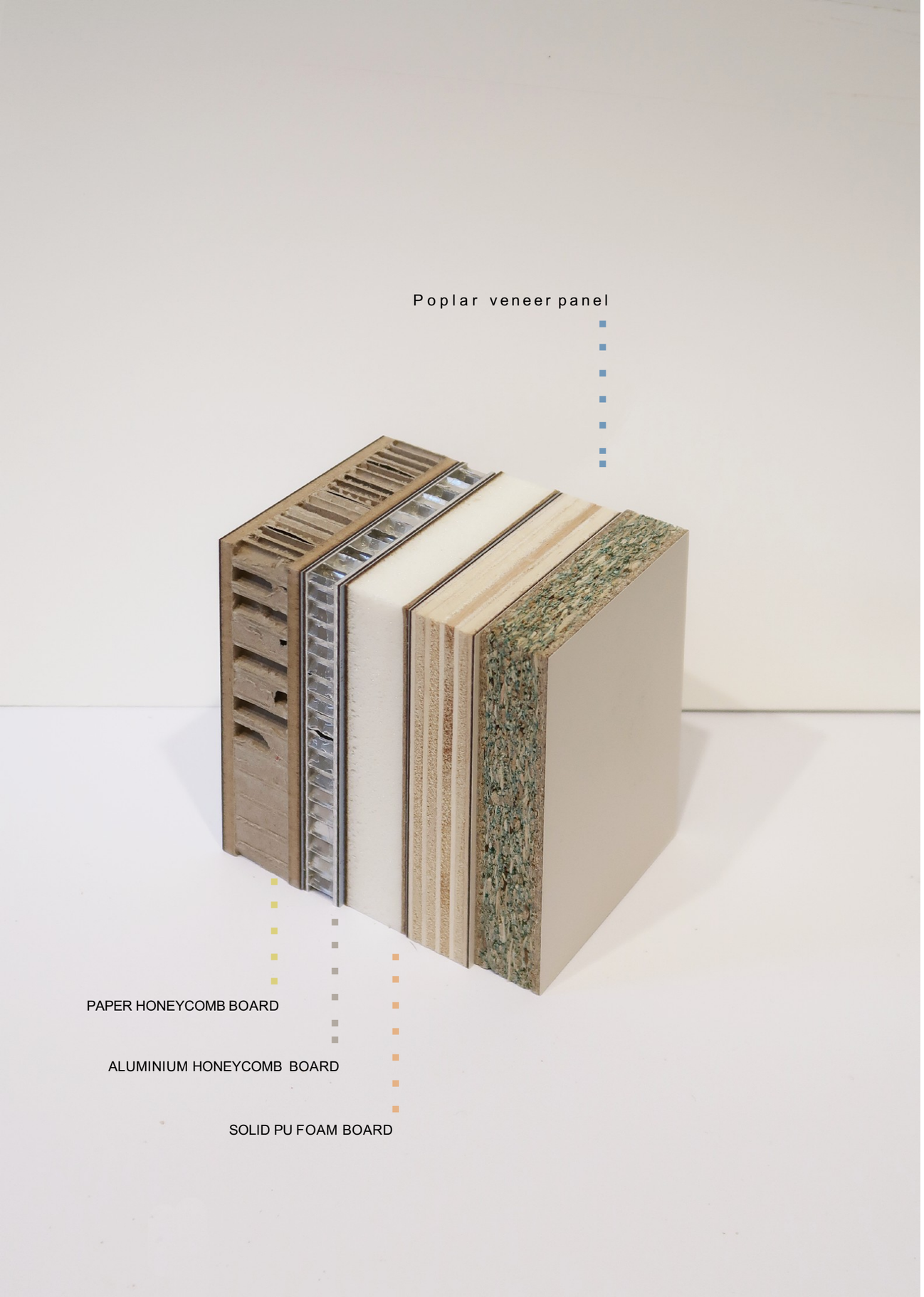
Poplar veneer panel
PAPER HONEYCOMB BOARD
ALUMINIUM HONEYCOMB BOARD
SOLID PU FOAM BOARD

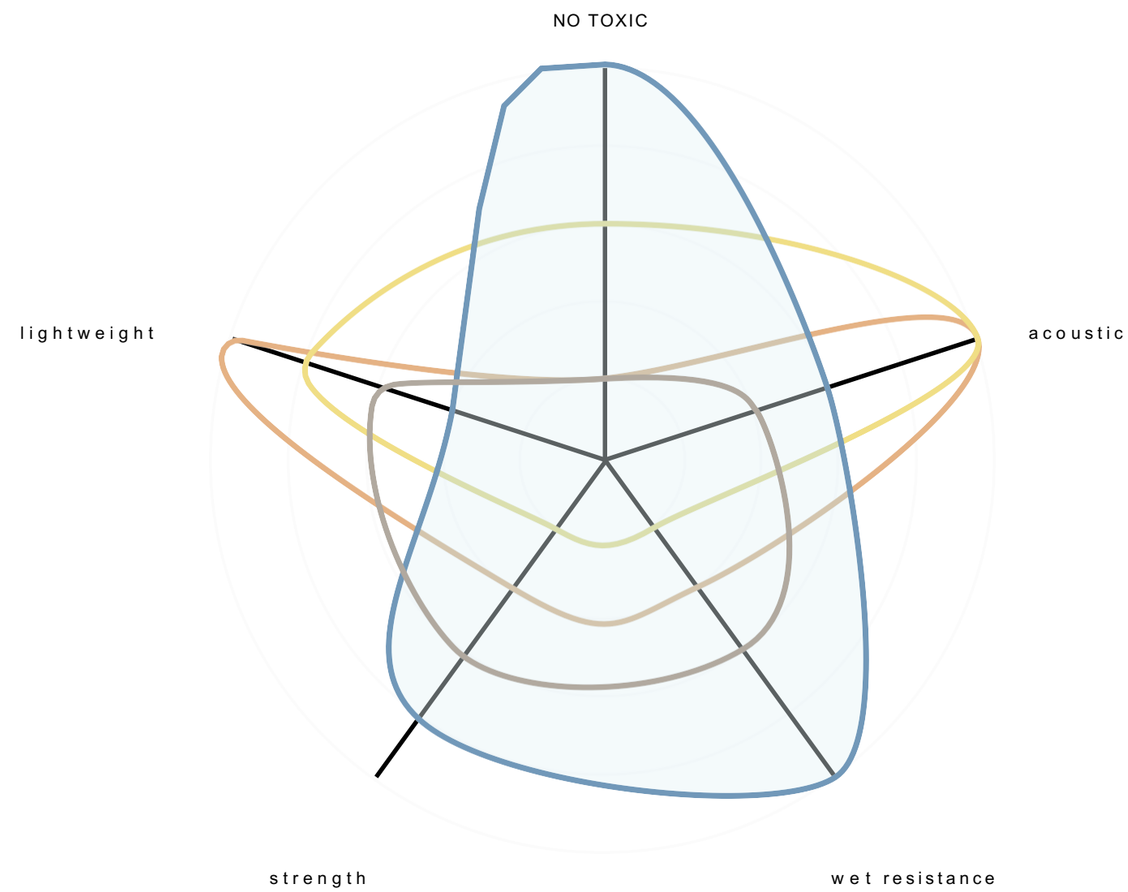
NO TOXIC
lightweight
acoustic
strength
wet resistance

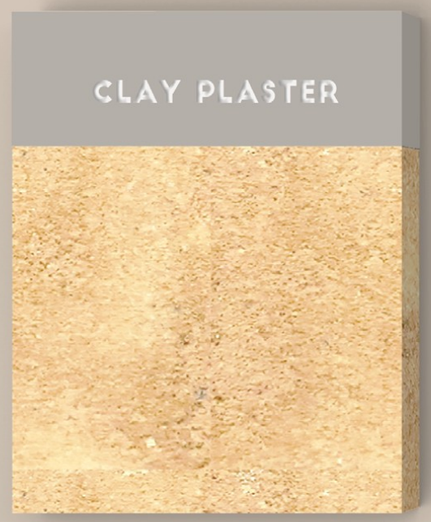
CLAY PLASTER

WOOL FELT

BARK

LEATHER

DAY I

DAY 26

DAY 52

DAY 76

COLLECT

REPAIR

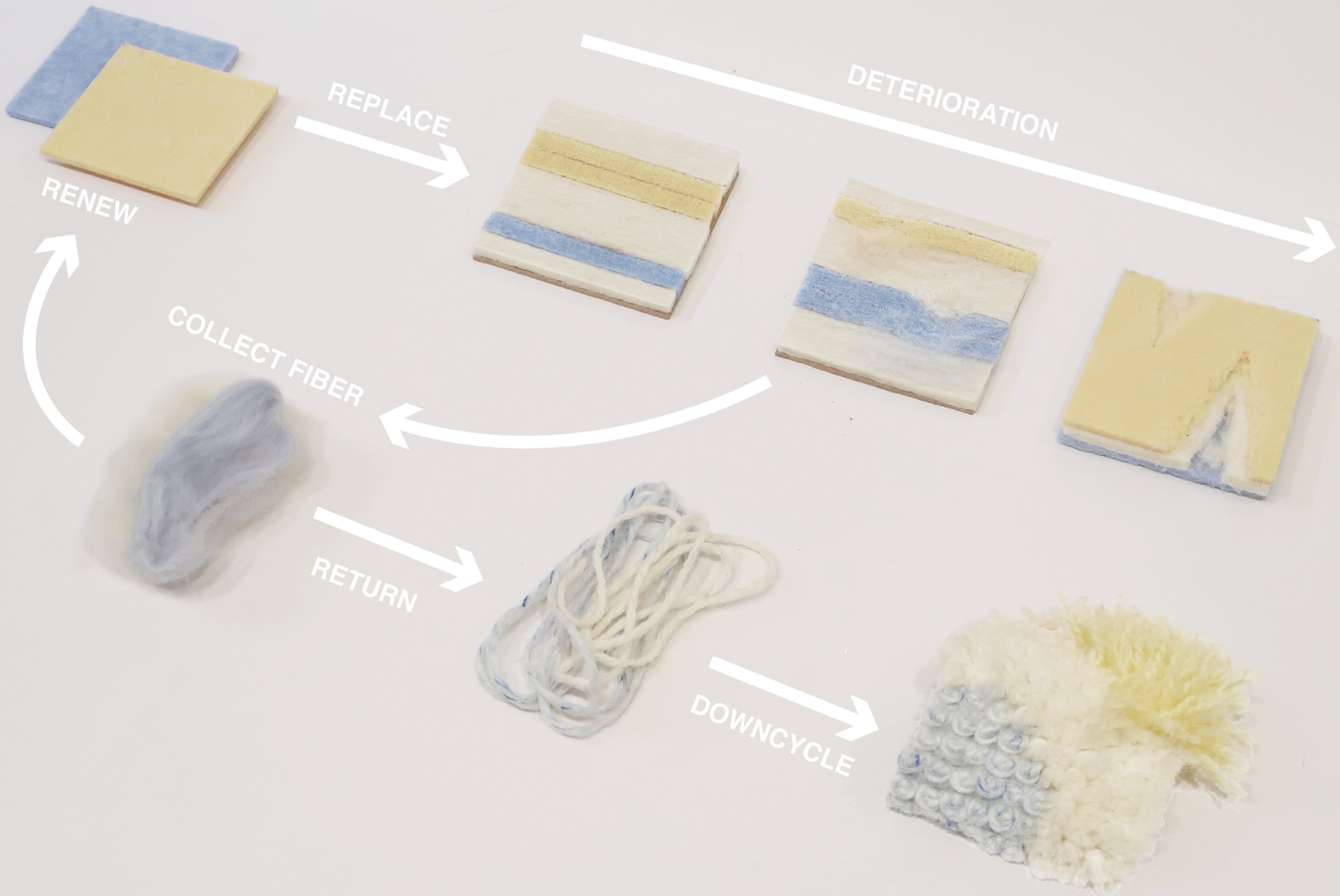
RENEW
REPLACE
DETERIORATION
COLLECT FIBER
RETURN
DOWNCYCLE

WALL PANEL

Assembly Instructions

a wall panel system which is
a sustainable solution,
it is easy to move and assembled,
and every component is
fully demountable and reusable.

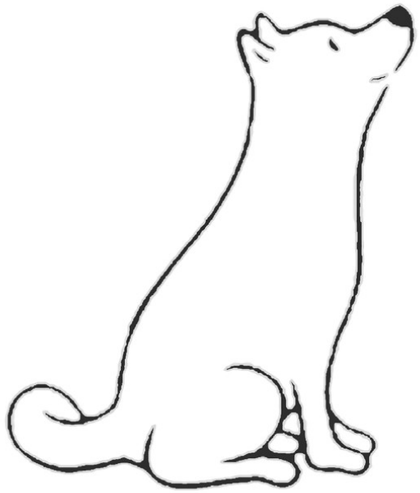

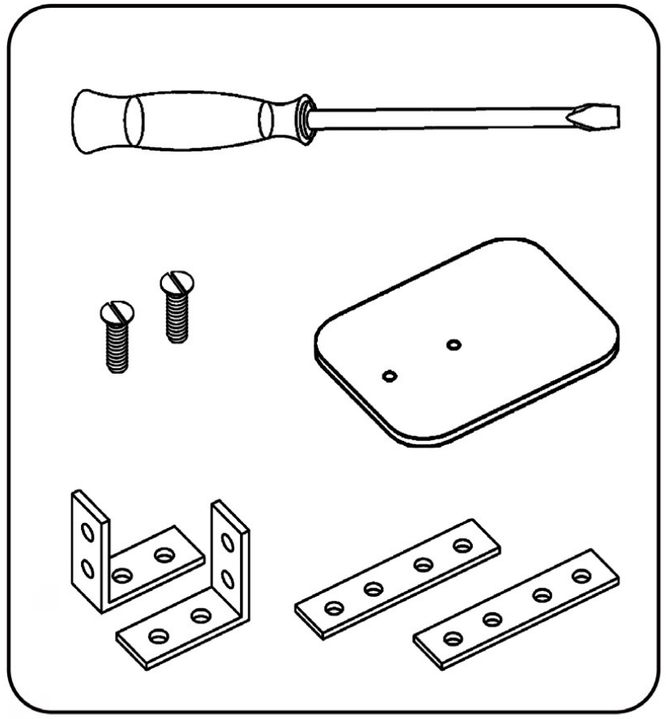

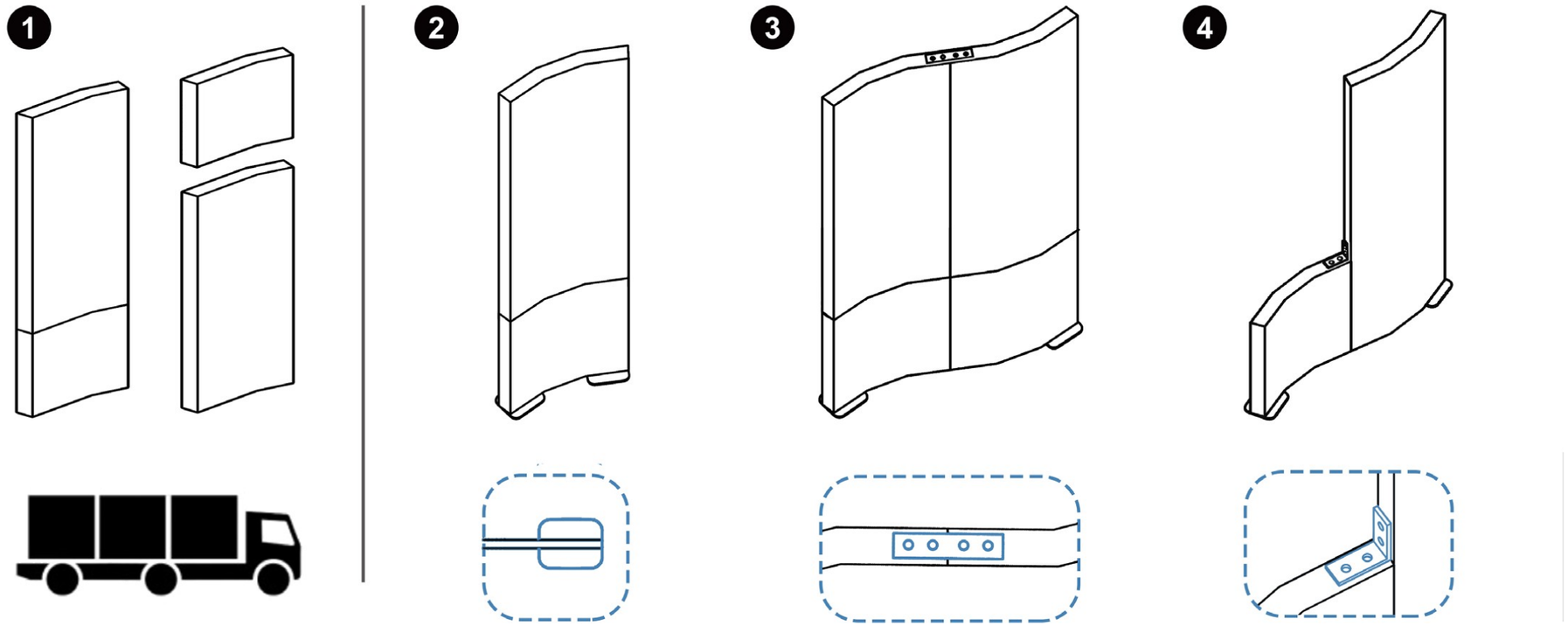

5

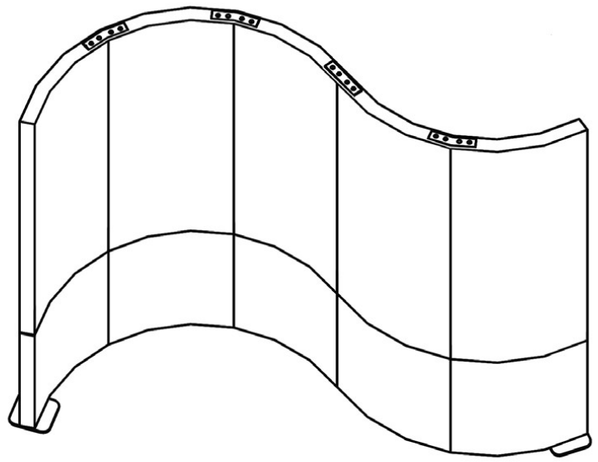

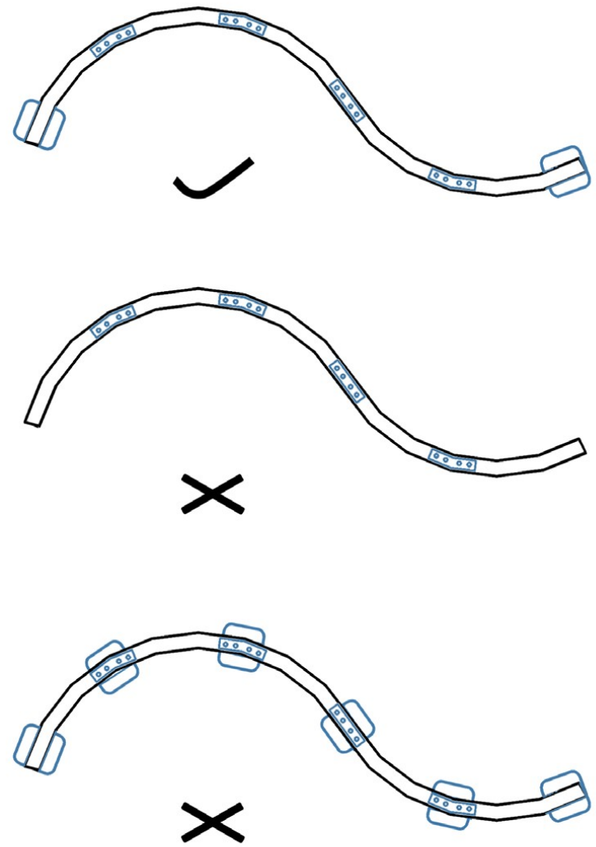

6

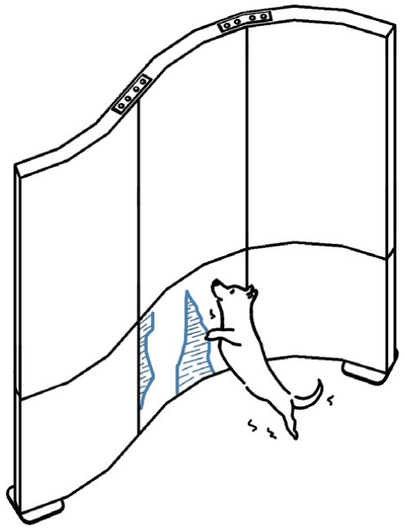

7

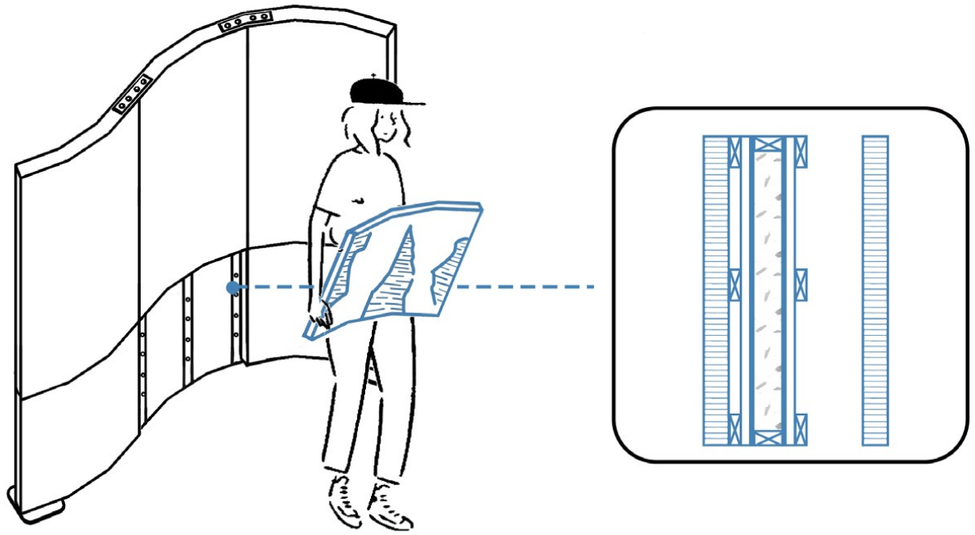

8

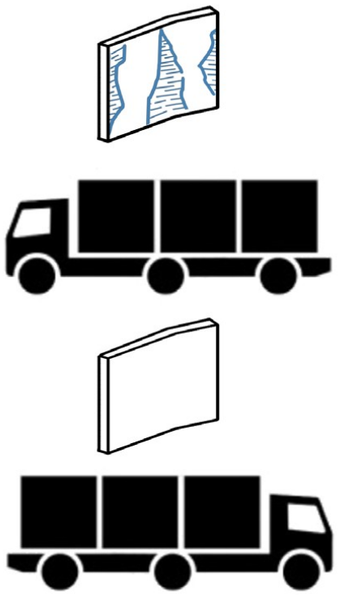

9

10

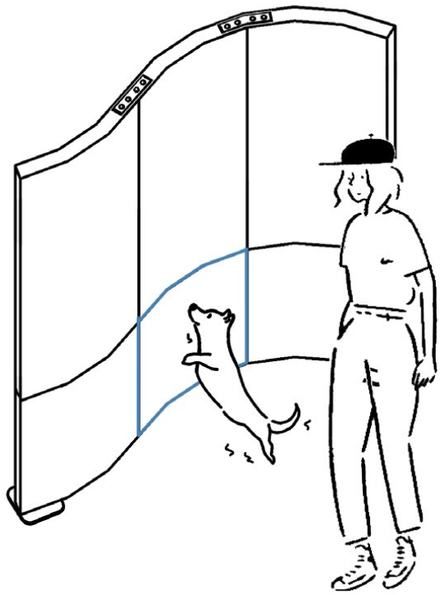

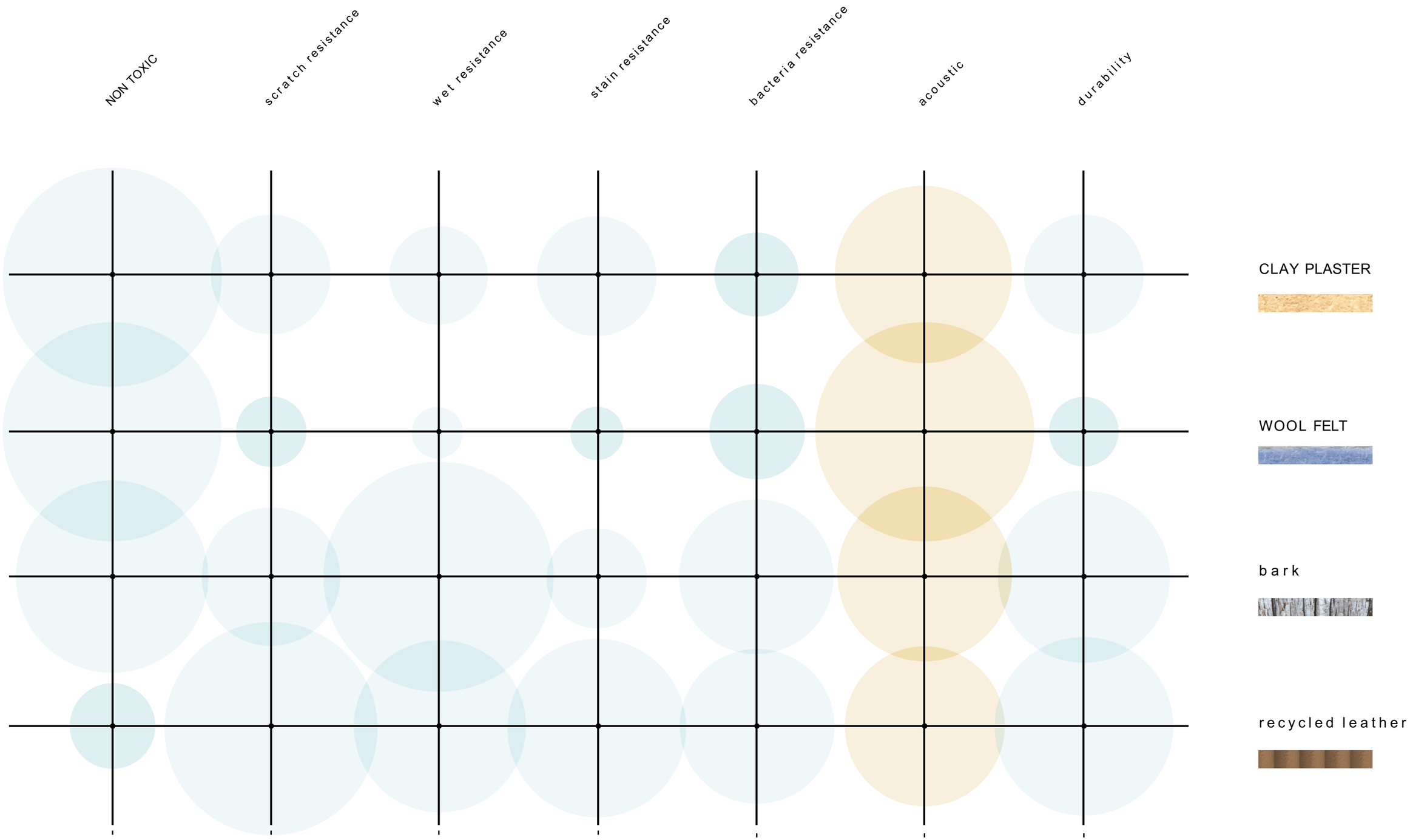
NON TOXIC
scratch resistance
wet resistance
stain resistance
bacteria resistance
acoustic
durability
CLAY PLASTER
WOOL FELT
bark
recycled leather

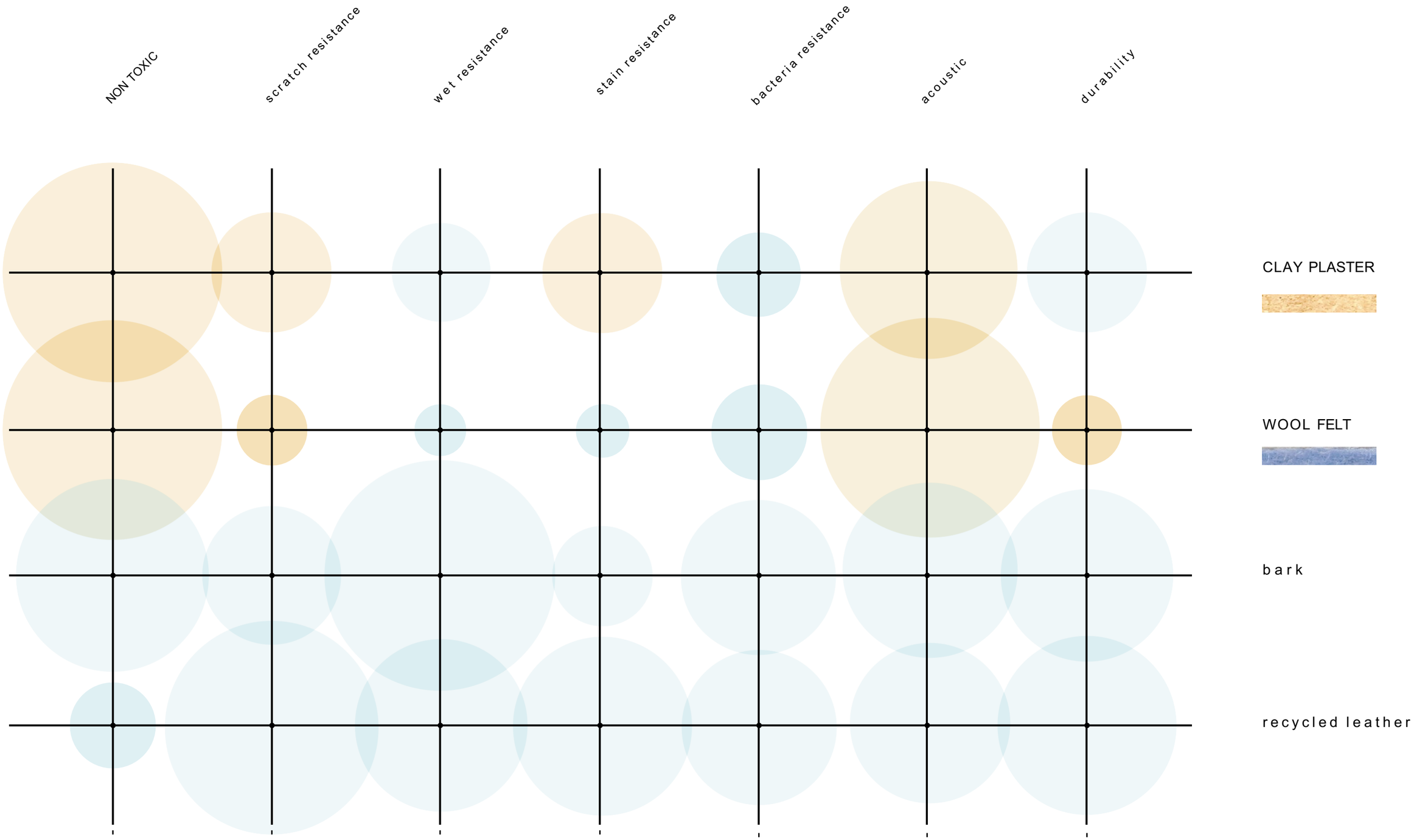
NON TOXIC
scratch resistance
wet resistance
stain resistance
bacteria resistance
acoustic
durability
CLAY PLASTER
WOOL FELT
bark
recycled leather

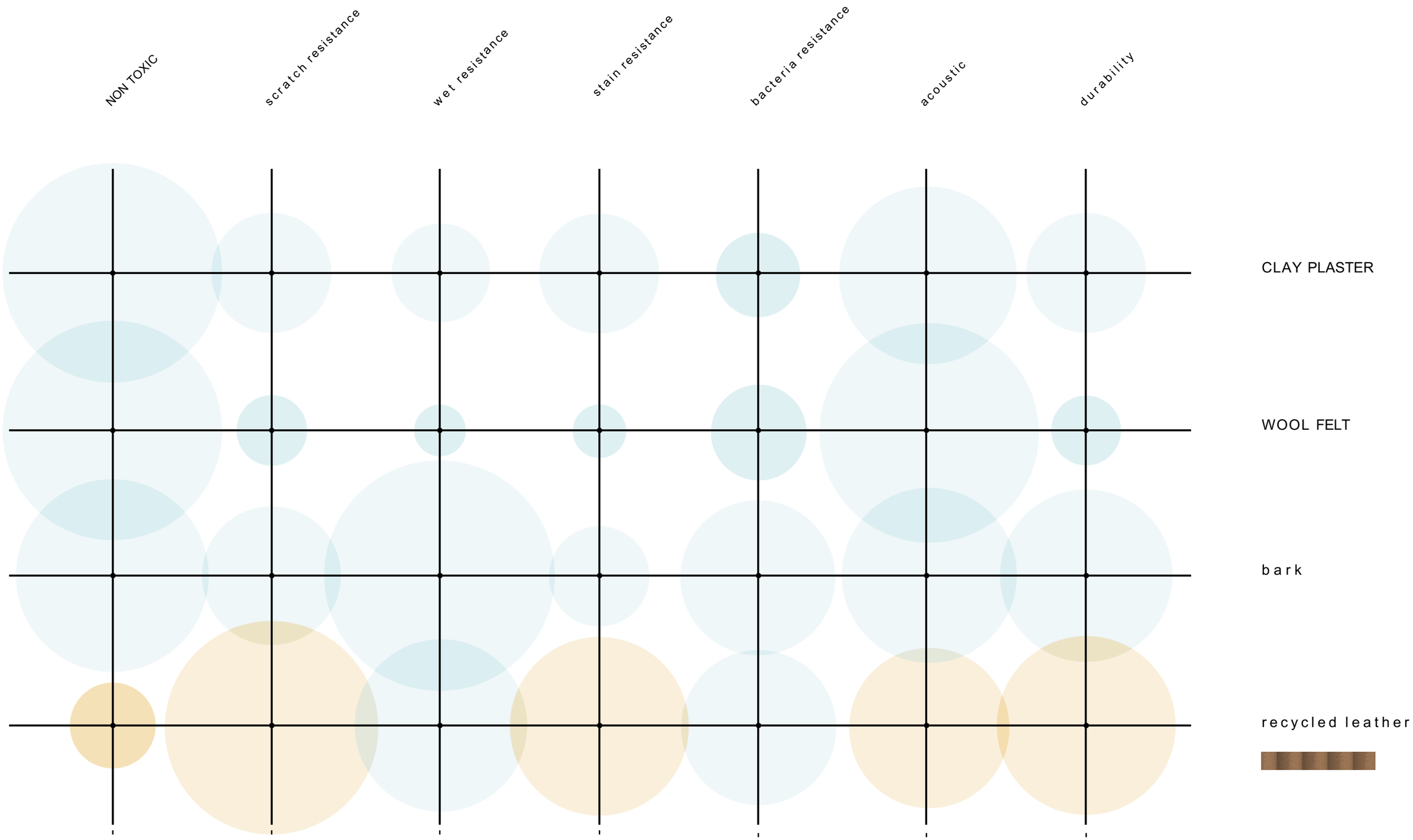
NON TOXIC
scratch resistance
wet resistance
stain resistance
bacteria resistance
acoustic
durability
CLAY PLASTER
WOOL FELT
bark
recycled leather

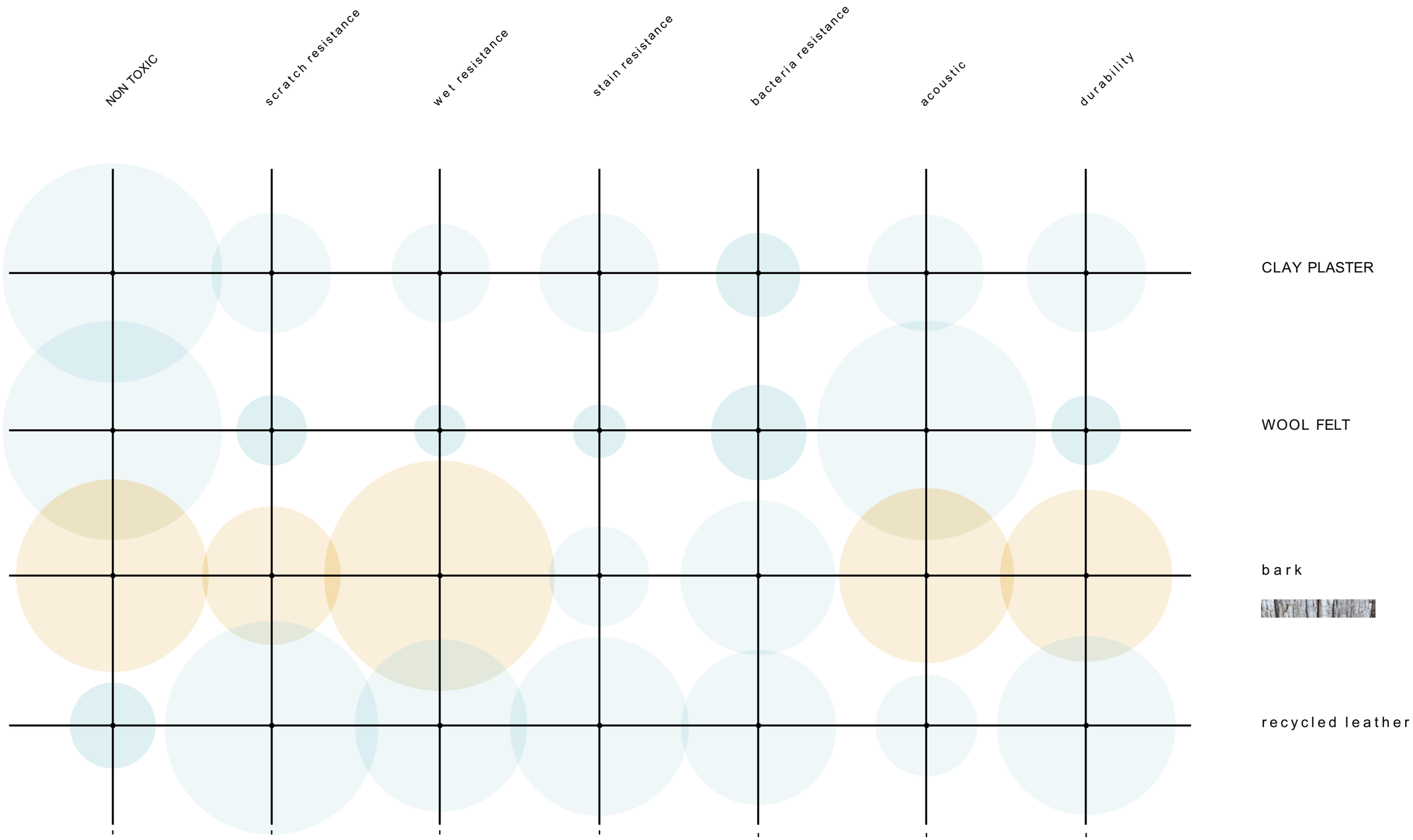
NON TOXIC
scratch resistance
wet resistance
stain resistance
bacteria resistance
acoustic
durability
CLAY PLASTER
WOOL FELT
bark
recycled leather

A PVC PANEL RELEASES

AS MUCH **CO2E** AS

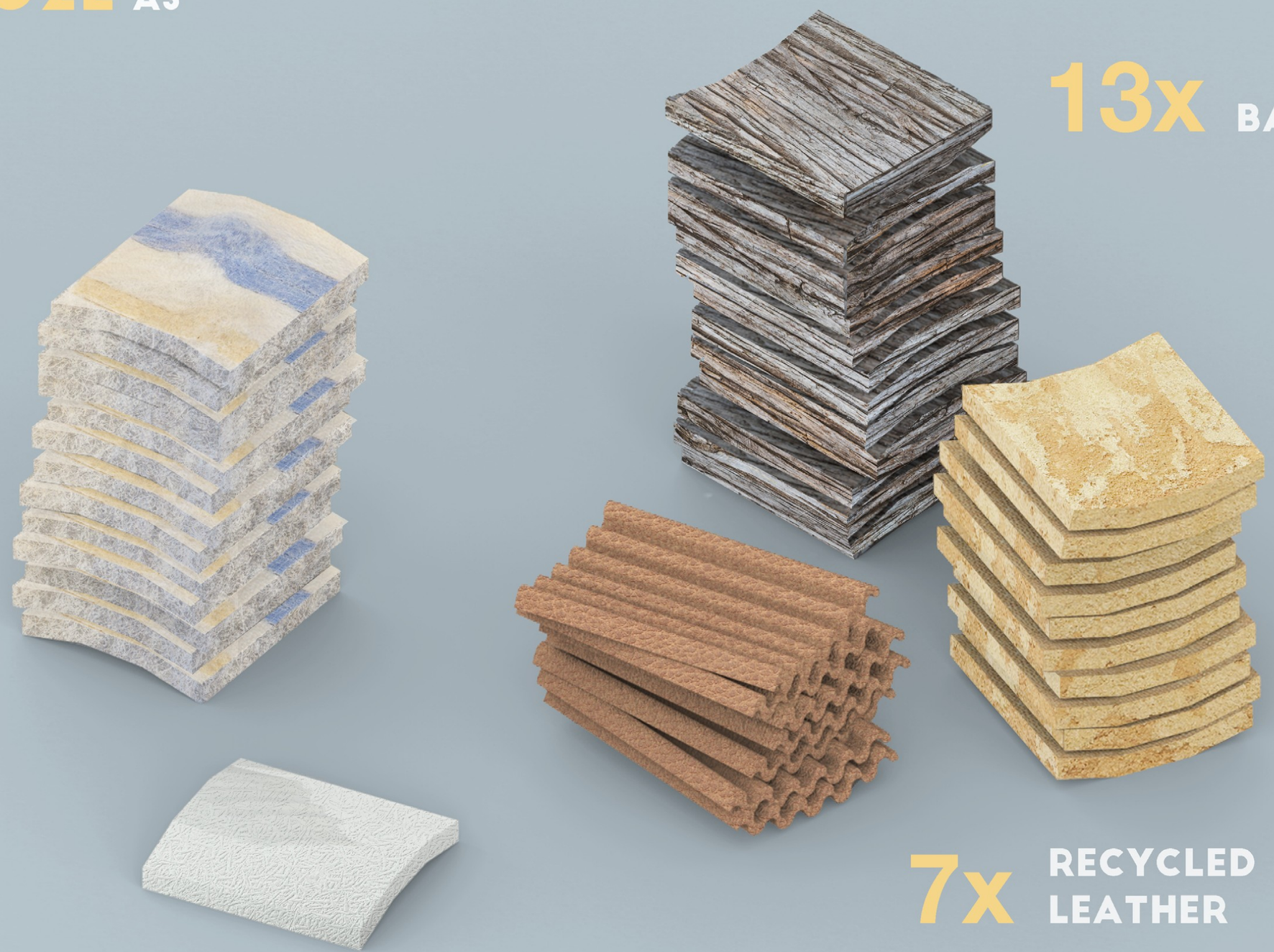

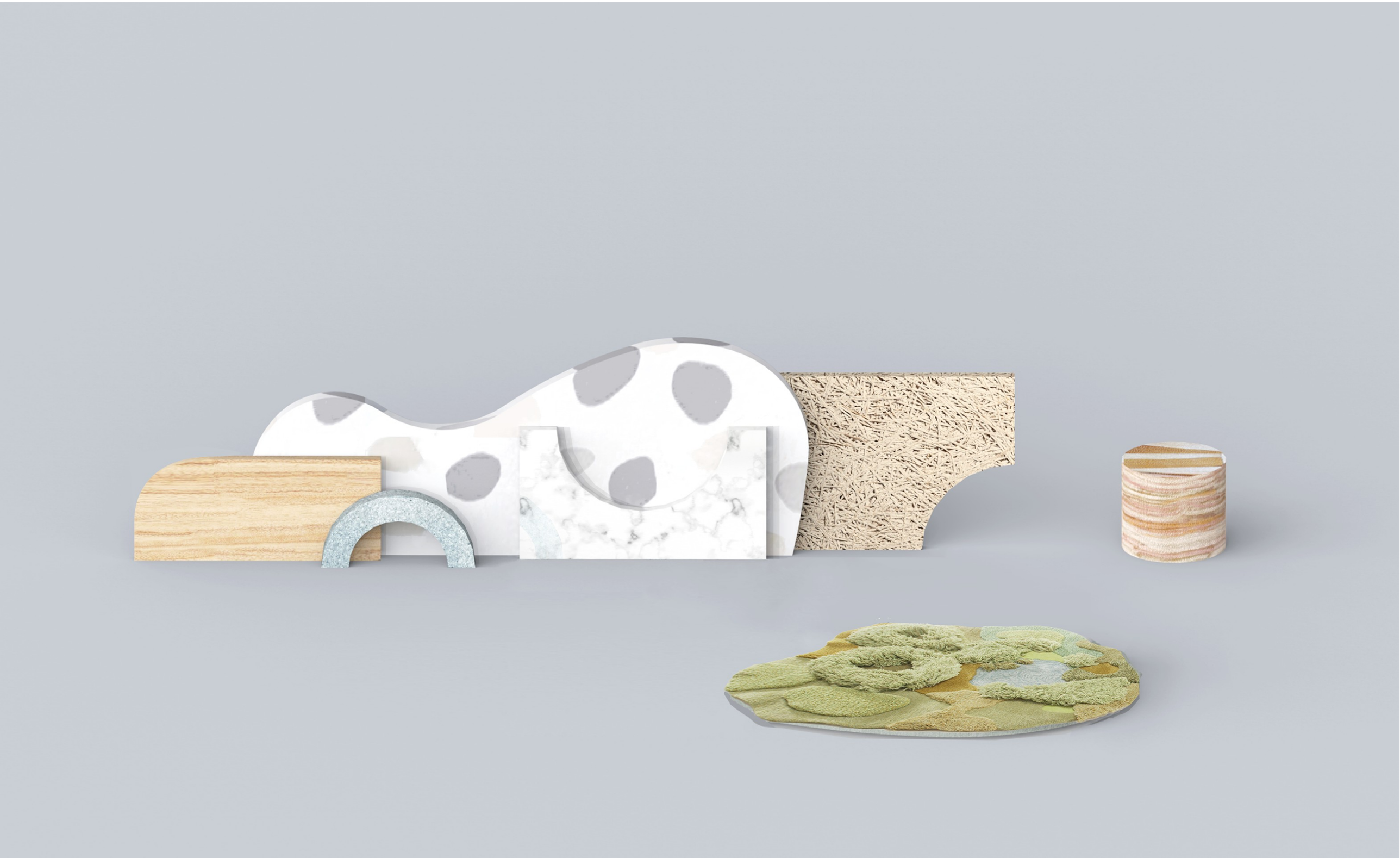

PAWFE
PAWFE

PAWFS

PAWFE
PAWF
MARVIN
GAYE

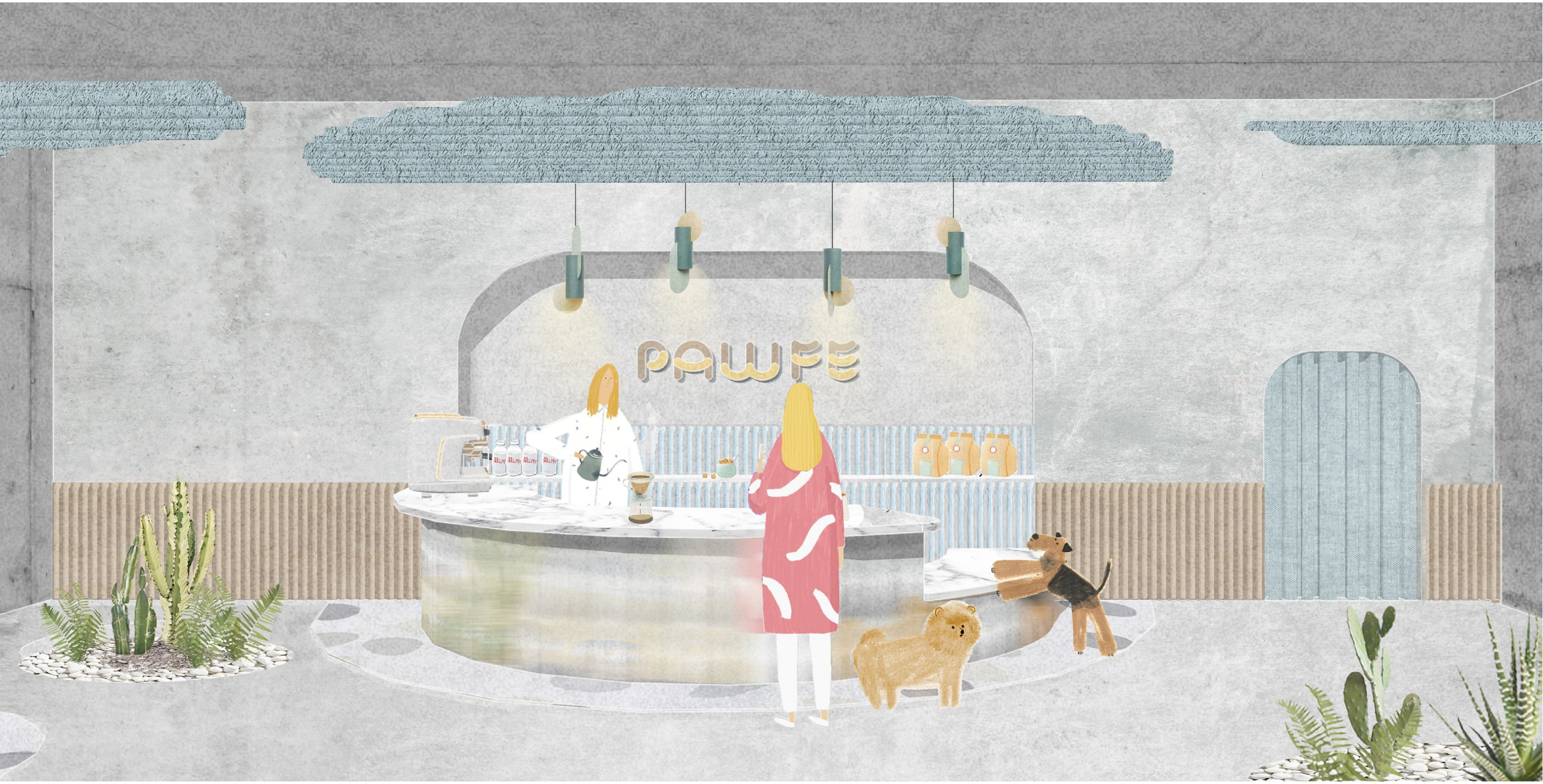
PAWFE

Chump Chump
Chump Chump
Chump Chump
Chump Chump

Cream Cheese
Cream Cheese
Cream Cheese
Cream Cheese

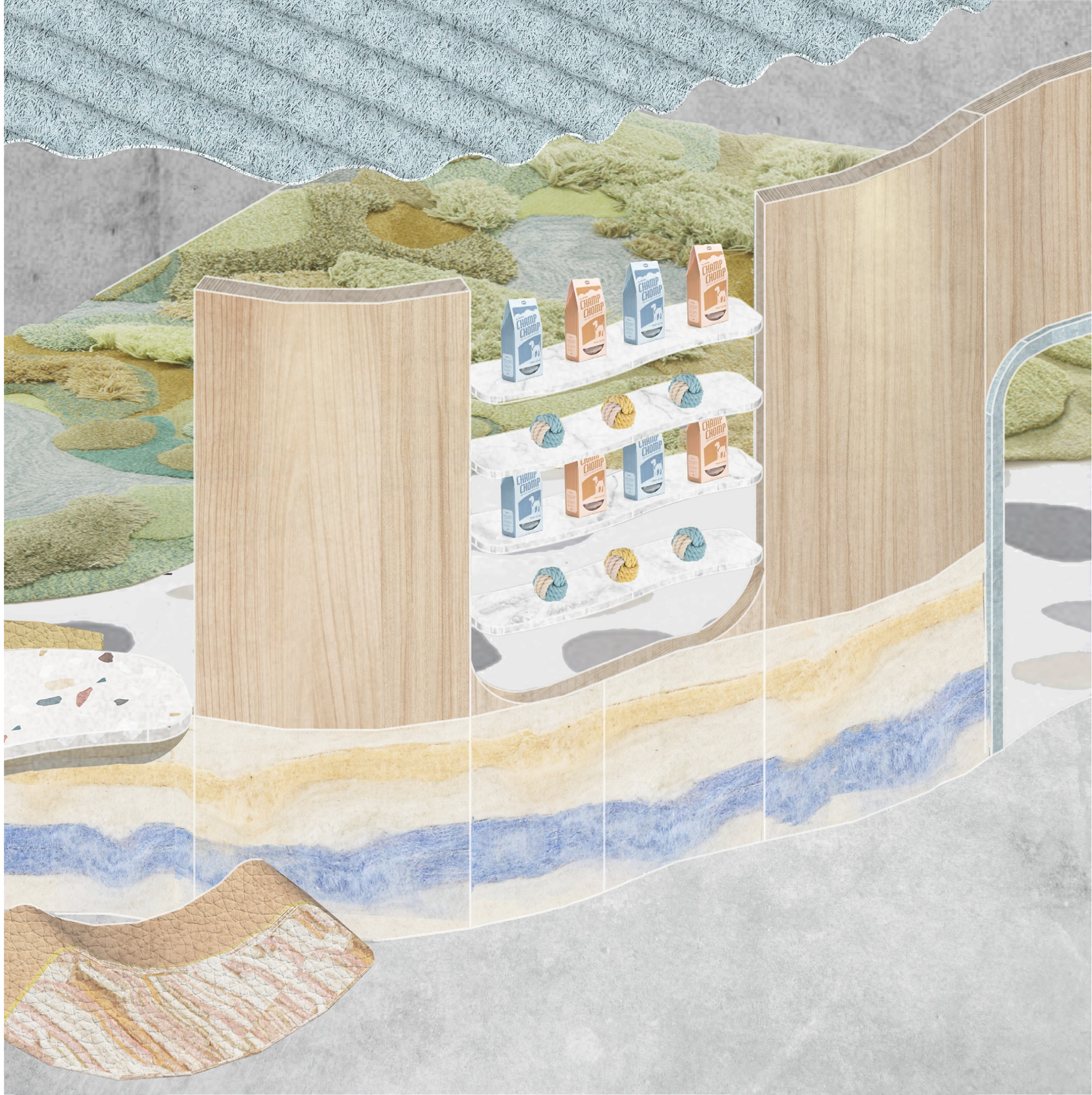
CHAMP CHOMP

PAWFE